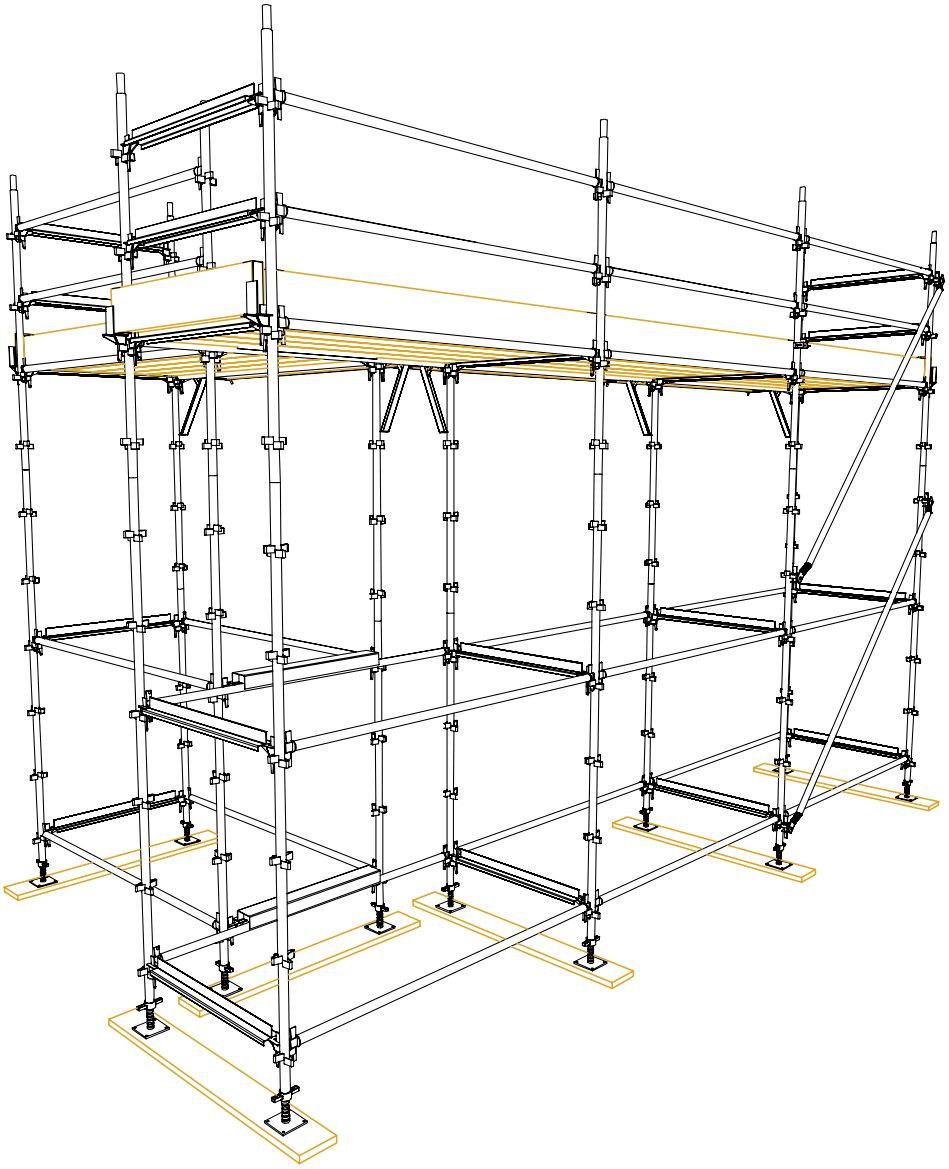

Climastage

User Guide

www.actavo.com

Actavo

The Climastage user guide for access scaffolds has been written to provide guidance on how to safely erect, use and dismantle basic independent Access Scaffolds formed in Climastage access equipment to a maximum safe height of 30 metres.

This document has been compiled using data and testing methods contained in BSEN1210 and BSEN 12811. Wind loading is in accordance with BS 6399 part 2. The Guide is designed for the safe use of Climastage components as currently manufactured. Guidance is provided for scaffolds of both nominal widths of 1.2m (5 boards) and 0.8m (3 boards) widths.

For information on Climastage components not contained in this document please consult your local Actavo (UK) Limited Branch.

Disclaimer:
The information contained in this User Guide relates solely to equipment manufactured and supplied by Actavo (UK) Limited.

Other similar types of products should not be mixed with Genuine Climastage products. The consequences of mixing other manufactures equipment may great reduce the overall stability of the Access Scaffolding.

Note:
Only trained, competent operatives should erect, dismantle or adapt Climastage scaffolds at all times.

Actavo (UK) Limited recommends that as a minimum guide lines for working practices for Scaffolders working at heights contained in document SG4 produced by the NASC (National Access and Scaffolding Confederation) are applied to all scaffolding activities.

Contents

Climastage Scaffolding Safety Guidance	2
"Never"	3
Design Matrix for all work in Climastage	4
Section 1 - Components	5
Standards	6
Transoms	7
Ledgers	8
Braces	9
Battens	10
Stage Brackets	11
Tie Bars	12
Other components	13 - 16
Section 2 - Erection Guide	17
Erection Guide	18 - 25
Climastage safety harness attachment points	26
Correct fitting of tie bars	27
Bracing pattern	28
Tying patterns	29
Section 3 - Standard Solutions	31
Untied Climastage Layout - Typical buttress, raker & plan	32
Untied Climastage Layout - Typical arrangement	33
800mm wide Climastage layout	34
800mm wide Climastage layout - Section	35
Plan details of Free Standing Climastage Access Scaffolds	36
Progressive Buttress Scaffold erection sequence	37
Typical arrangements for 4 and 5 fan details - using tube and	38
fittings Double Returns	39
Alternative Double Returns	40
Recesses and Angled Returns	41
Recess detail	42
Small projections	43
Typical Loading Bay	44
Typical Arrangement Side of Loading Bay	45
Ladder Tower	46
Section 4 - Safe height tables	47 - 62
Appendix - Alsure Aluminium Kwikstair User Guide	63 - 72

Climastage Scaffolding Safety Guidance

This guidance is not intended to replace any relevant European Codes, British Standards, company Procedures, Work at Height Regulations and other legislation but is a practical guide to good scaffolding practice.

1. Ensure that you follow your company's safe systems of work at all times.
2. Ensure that all persons erecting, dismantling or modifying any structure are competent to carry out the task.
3. Ensure that all persons erecting, dismantling or modifying the scaffold structure are working to the latest version of the National Access and Scaffolding Confederation (NASC) SG4 guidance as a minimum.
4. Ensure all Personal Protective Equipment (PPE) is suitable and sufficient and worn as appropriate.
5. Consideration should also be given as to where additional hazards may be present whilst scaffolding operations are taking place, such as overhead power cables, roadways, schools and if public protection is required, if the scaffold is to be sheeted, who is responsible for the design.
6. Scaffold structures are required to be inspected and recorded,

   - Prior to being taken into use for the first time
   - After any alteration or adverse weather
   - After any event likely to affect its stability
   - Regular intervals not exceeding 7 days

7. Only genuine Climastage components are to be utilised.
8. Access and egress should be considered as early as practicable, for both the scaffold operatives and the end user in mind. Ladders should be used by the scaffolder's when erecting, modifying or dismantling any structure. Ledgers and braces etc must not be used as a means of support.

Below is the hierarchy of measures to consider when selecting methods to prevent persons falling at access and egress points.

- Staircases
- Ladder Access Bays with Single Lift Ladder
- Ladder Access Bays with Multiple Lift Ladders
- Internal Ladder Access with Protection i.e. Ladder trap/ handrails etc
- External Ladder Access Using a Safety Gate / Swing Arm System

For further clarification consult the NASC Guidance Document SG25.

9. Employers MUST ensure that Work at Height is:

   - Properly planned
   - Appropriately supervised
   - Done in a safe manner "so far as is reasonably practicable"
   - Include planning for emergencies & rescue
   - Weather conditions do not jeopardise health and safety

If you are in any doubt with regard to any information contained within this Handbook please contact your local Actavo office.

"Never"

Never	Bomb scaffold equipment or any other materials up or down.
Never	Work out-with your competence.
Never	Undertake work at height when there is a potential to fall without wearing your safety harness correctly and clipping the lanyard to a secure anchor point.
Never	Do any overhead or street work without displaying warning signs, or segregating others from the live working zone (barriers).
Never	Use any defective / modified equipment.
Never	Remove or interfere with guards, they are there to protect you.
Never	Overload the scaffold you are erecting, altering or dismantling with spare materials.
Never	Rest scaffold equipment against an object if there is a potential for it to fall
Never	Leave partly erected or dismantled scaffolds in an unsafe condition, (always ensure adequate signage is displayed to warn others).
Never	Accept an instruction from a customer or anyone else that does not comply with safety regulations.
	Leave an exposed edge where people or materials could fall.

Actavo

Design Matrix for all work in Climastage

Type of Access or Working Scaffold in Climastage		Category 1 Design mandatory	Category 2 Technical advice required	Category 3 Technical advice not required
1	Climastage Access scaffolds not exceeding the maximum height and loading in the Climastage User Guide tie patterns and tied accordingly.			Yes
2	All Climastage scaffolds exceeding the maximum height, loading and number of boarded lifts.	Yes		
3	All Climastage scaffolds where ties cannot be installed strictly in accordance with the patterns shown in Item 1 above.		Yes	
4	Untied Climastage scaffold erected strictly in accordance with Detail Nos. MA-3063, MA-3064, MA 3065 and NASC TG4.			Yes
5	800mm wide Climastage scaffolds erected strictly in accordance with Detail Nos. MA3066 and MA3067 and tied in accordance with the tie pattern in the Climastage User Guide.			Yes
6	Climastage scaffold arrangements requiring plan and/or ledger bracing.		Yes	
7	Buttressed Climastage Layouts **not** in accordance with Detail Nos. MA-3068.		Yes	
8	Loading Towers erected in accordance with Climastage User Guide.			Yes
9	Side Access Loading Towers erected in accordance with erection guides prepared for the new and additional components.			Yes
10	Ladder Towers erected in accordance with Climastage User Guide.		Yes	
11	Hoist Towers in Climastage.		Yes	
12	Mobile and Static access towers in Climastage.		Yes	
13	All Climastage scaffold structures supported off existing buildings and roofs.		Yes	
14	Protection Fans attached to Climastage scaffolds not in accordance with Detail No MA-3069.	Yes		
15	Birdcage scaffolds erected from Climastage access equipment.		Yes	
16	All Climastage scaffold structures with lift heights greater than 1.981m.		Yes	
17	All Climastage scaffold structures not included in the above.		Yes	

Section 1:

Components

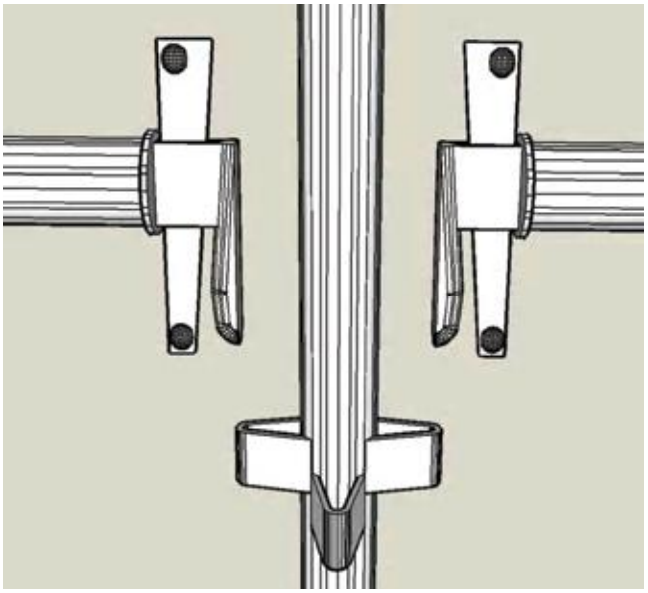

Standards

Galvanised Standards manufactured from 48.3 O.D. 10g steel tube to BS4360:1979 Grade 50c.

The standards provide the vertical columns of a scaffold. They have clusters of 4 'V' Pressings orthogonally positioned, at regular intervals along their length, to house the end fittings of horizontal components - ledgers and transoms - and diagonal face bracing. A spigot at their upper end facilitates extension of the scaffold columns upwards by addition of further standards. The spigots and lower ends of the standards have 17.5mm diameter mating holes to take 16mm diameter spring retained pins or bolts for standards subject to tensile forces.

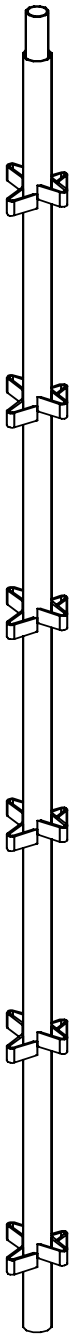

9'9" Standard self-weight = 14.9kg

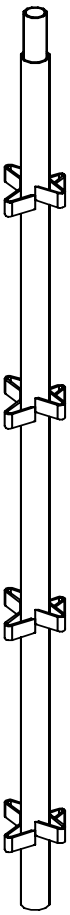

6'6" Standard self-weight = 9.8kg

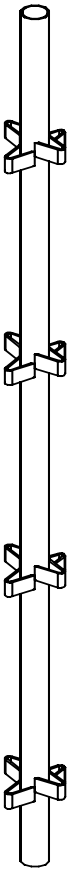

6'6" Upright open ended

4'10½" Upright open ended

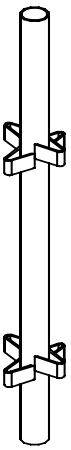

3'3" Upright open ended

Transoms

4'2" Transoms
Self Weight = 9kg

Pressed steel inverted channel section with central up stand to span between standards 1270 (4'2") apart and carry 5 Nº 228 wide timber battens or steel stagings plus toe boards.

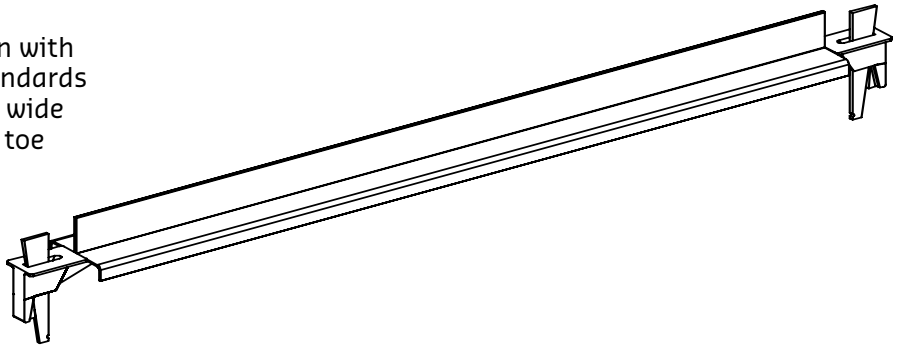

2'8" Transoms
Self Weight = 6.9kg

Reduced length versions of the 4'2" transoms to span between standards 813 (2'8") apart and carry 3 Nº 228 wide timber battens or steel
stagings plus toe boards.

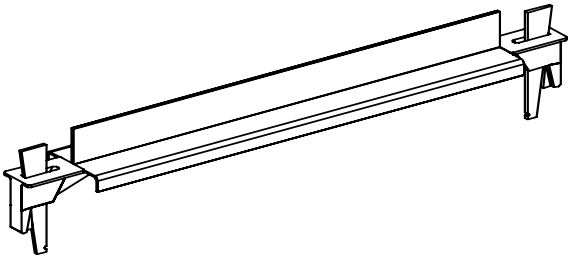

4'2" Return Transoms
Self Weight = 12.5kg

Placed over ledgers in one bay of Climastage and fixed to two standards to start a 90º return with another run. Complete with seating for 5 Nº 228 wide battens or steel stagings giving the same decking level for both scaffold runs.

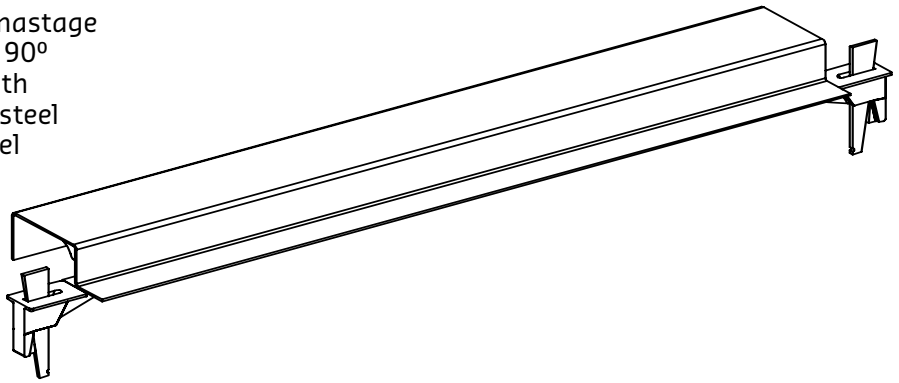

APPLIES TO ALL TRANSOMS
Maximum permissible imposed load in 8'0" bays = 3kN/m² of platform area (Masonry or special duty loading)

Ledgers

These components have a wedge fixing device at each end. These fit into the upper 'V' pressing on the standard, they are used in pairs as ledgers at each lift and to for guardrails at platform levels.

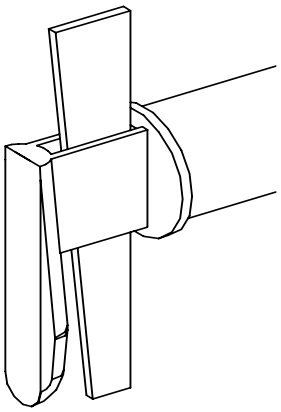

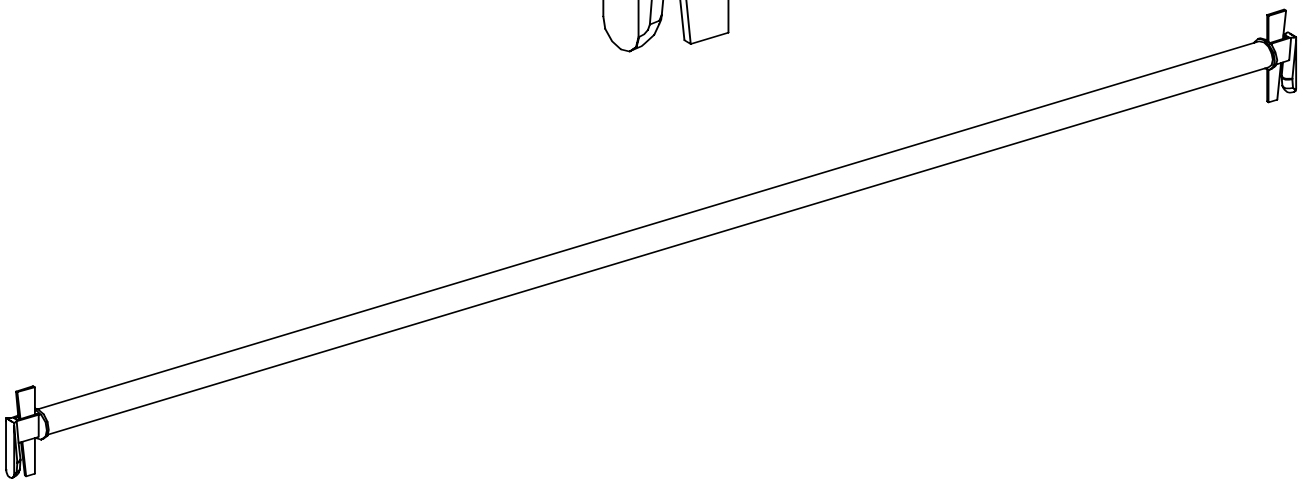

8' LEDGERS
Self Weight = 9.5kg

Manufactured from 48.3 O.D.
10g steel tube to BS4360 : 1979 grade 50c. Tube moment of resistance = 1.1kNm

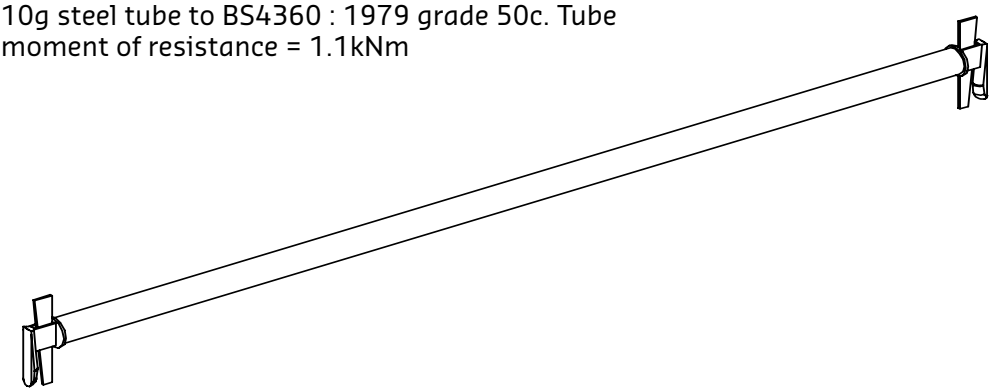

6' LEDGERS
Self Weight = 8.1kg

Manufactured from 48.3 O.D.
10g steel tube to BS4360 : 1979 grade 43c. Tube moment of resistance = 0.79 kNm

Braces

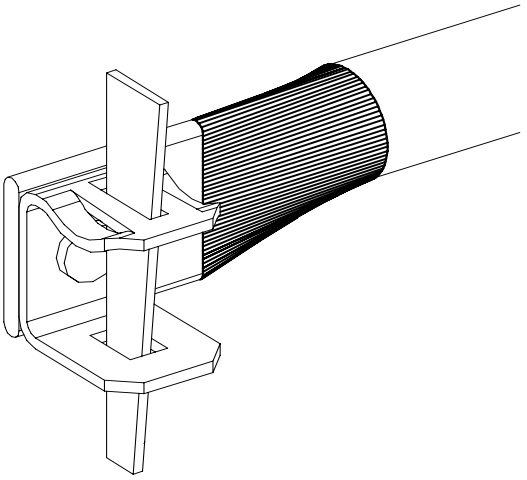

The diagonal braces comprise 48.3 O.D. 10g steel tubes to BS4360: 1979 Grade 43c, with swiveling wedge device to connect to 'V' pressings on the outside of adjacent standards,
to act as facade bracing to the outside face of the scaffold.

Facade bracing is provided to the full height of a scaffold to every fourth bay or closer on the outside face of an independent access scaffold.

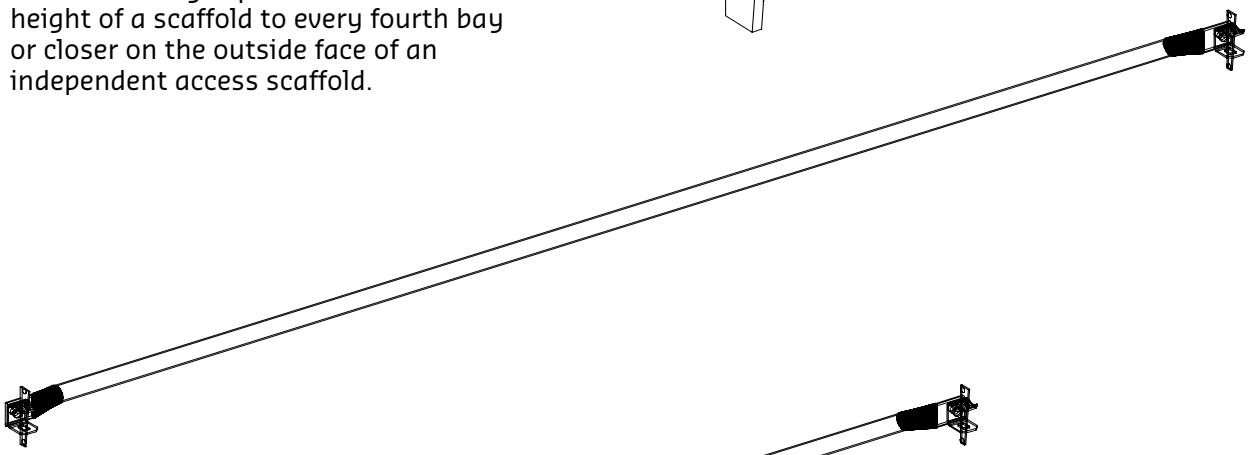

12' Diagonal Brace
Self Weight = 15.8kg
Used across 8' bays

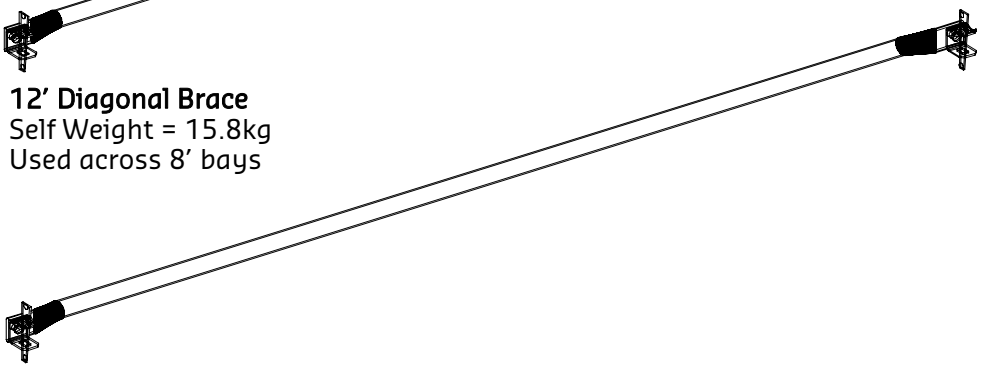

9' Diagonal Brace Self Weight = 11.6kg
Used across 6' bays

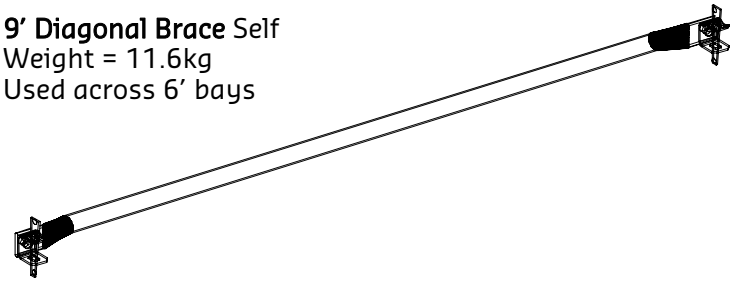

6' Diagonal Brace Self Weight = 8.5kg Used across 4'2" bays

Battens

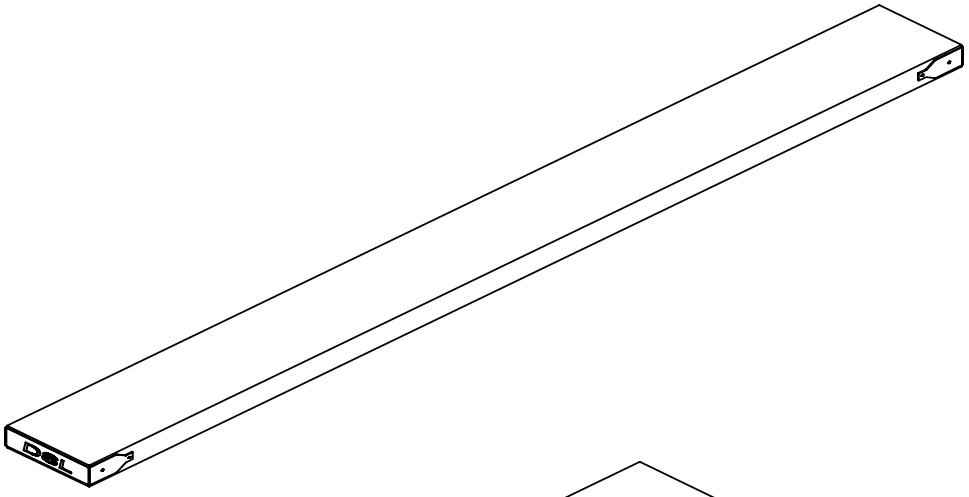

8' Batten
Self weight = 18.1kg

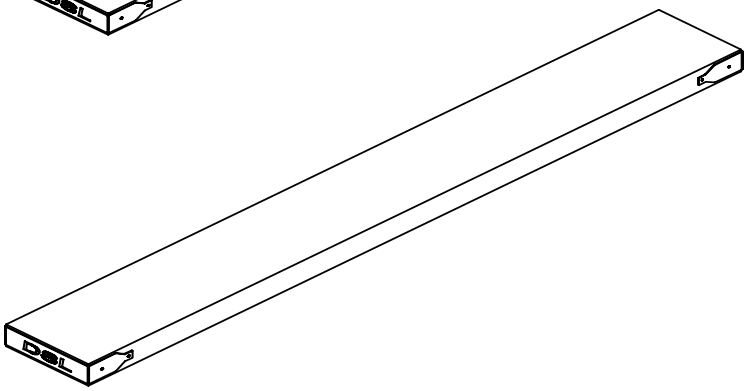

6' Batten
Self weight = 13.6kg

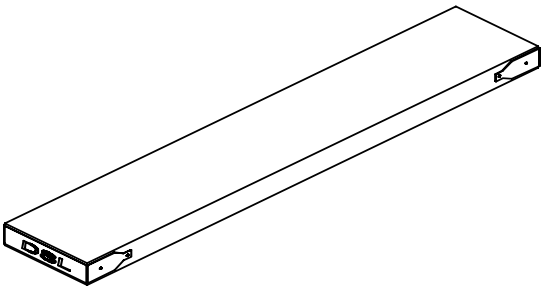

4'2" Batten
Self weight = 9.1kg

The battens are made from selected softwood with end bandings.
Moment of resistance of section = 1.3kNm
The steel stagings have the same overall dimensions of the battens. Their weights are:-

8' Steel staging = 17.3kg
6' Steel staging = 13.2kg
4'2" Steel staging = 9.1kg

Moment of resistance of section = 1.26kNm
The battens and steel stagings have ample strength, when spanning their full lengths between supporting transoms to carry 3kN/m² platform loading (Masonry or special duty loading).

Stage Brackets

Stage brackets are used to provide a cantilevered platform on the inside of the scaffold. they are formed from an inverted T Section with a wedge fixing device at one end which fits into a 'V' pressing on a standard.

The ends of 2 board and 3 board stage brackets must always be connected by tie bars to prevent the brackets opening out and allowing the battens to fall through.

1 Board stage bracket
Self Weight = 2.3kg

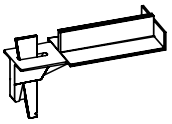

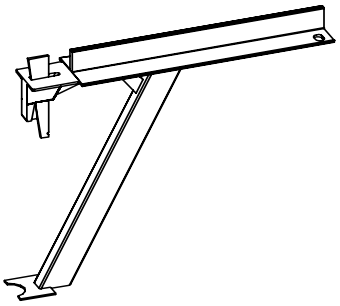

2 Board stage bracket
Self Weight = 6.3kg

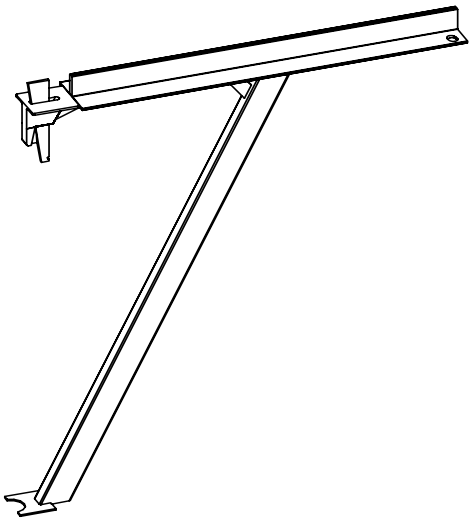

3 Board stage bracket
Self Weight = 9.1kg

Tie Bars

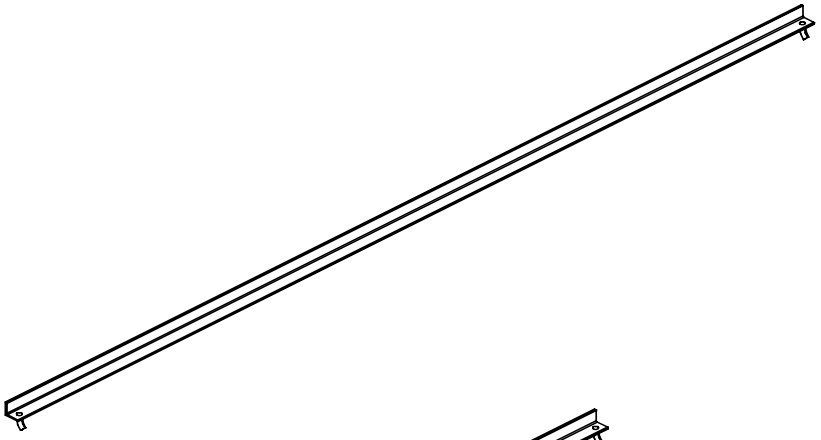

8' Tie Bars
Self Weight = 6.8kg

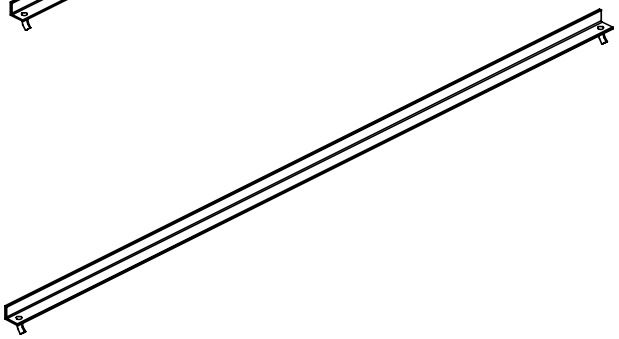

6' Tie Bars
Self Weight = 5.0kg

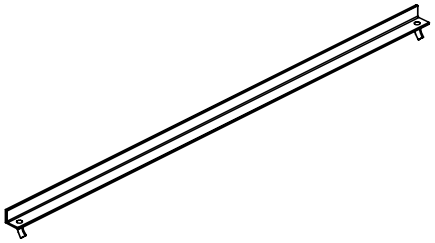

4'2" Tie Bars
Self Weight = 3.2kg

The tie bars are fabricated from 38 x 38 x 4.7 thick angles with end pins to fit into the slotted holes in the stage brackets. The tie bars fulfil the dual functions of preventing the inside battens from moving sideways and preventing differential movement of adjacent stage brackets.

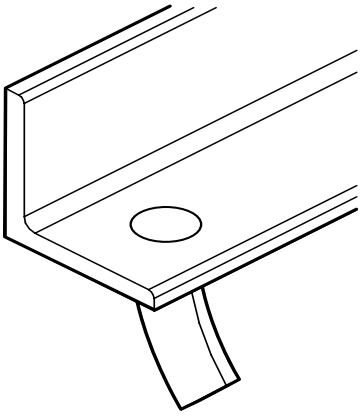

Other Components

Adjustable Base Plate
Self Weight = 3kg

Hollow rolled thread stem with threads distorted 150mm from top to ensure at least 150mm length remains inside the supported standard. Adjustment is by means of a collar wich can be screwed up or down the thread.

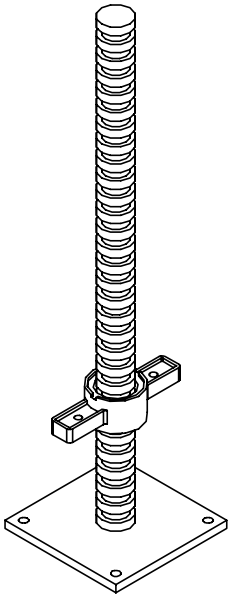

End Toe Board Brackets
Self Weight = 1.4kg

Pairs of end toe-board brackets are used with 4'2" battens or steel stagings to provide toe boards to the ends of 5-board wide platforms.

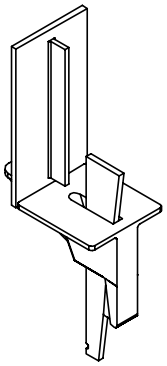

Toe Board Brackets Self Weight = 0.8kg

Toe board brackets fit round a standard to retain the ends of of the butting toe board battens and steel stagings in position.

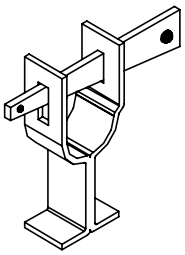

Other Components

Adjustable Base Plate
Self Weight = 4.7kg

Plain hollow stem with holes at 70mm intervals The height of the sleeve is adjustable by means of a pin located in the holes, and a collar on the threaded sleeve.

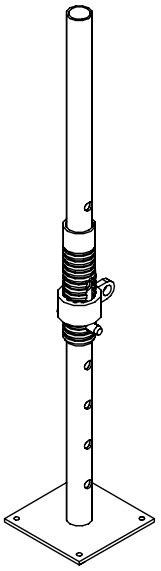

8' Bow String Transom

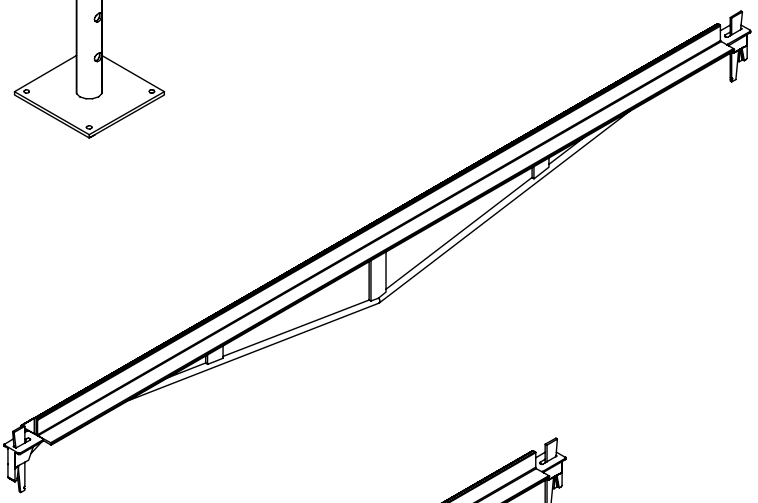

6' Bow String Transom

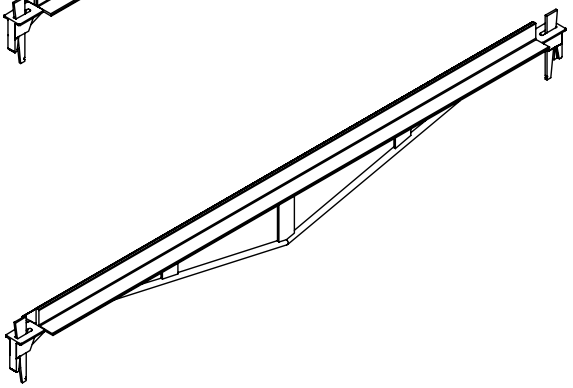

The same principal as with the standard transoms, however the bow string transom is able to span greater distances.

Other Components

Internal Corner filler
Self weight = 8.9kg

Climastage internal corner filler has been designed for use with two and three board stage brackets.

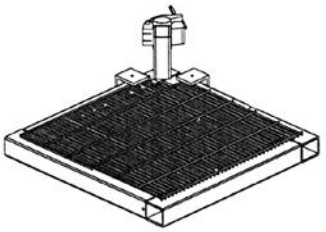

Sliding Stage Bracket
2 Board self weight =7.75kg
3 Board self weight = 9.5kg

Used to create an access within recesses where full bay lengths cannot be accommodated. Must be used in conjunction with 2 & 3 board fixed stage brackets.

Safe working load on platform supported by sliding stage bracket = 1.5kN/m.

Stairway Unit
Self weight = 31.9kg

The stairway unit is made from aluminium and fits into a 8' x 6'6" Climastage scaffold. For further information see Appendix.

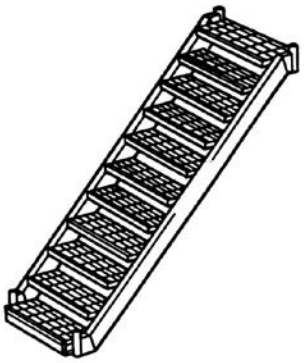

Handrail unit
Self weight = 10.0kg

This aluminium component fits into sockets in the stairway unit to provide a double guardrail.

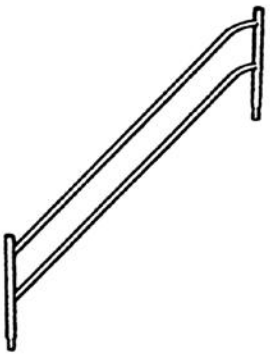

Other Components

Ladder Access Transom
Self weight = 10.0kg

This component is used in a ladder access tower to form an opening in the platform.

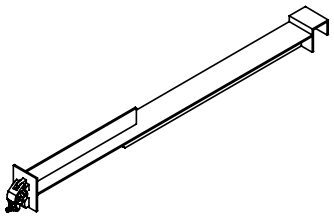

Loading Bay Transom
Self weight = 37.0kg

This Transom is designed to have the additional strength required to span 2.44m and is secured to the standards with two pairs of wedge fixing devices. The decking sits on the flange of the inverted T-section.

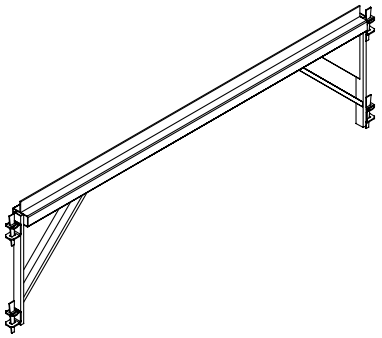

Loading Bay Gates
Self weight (pair) = 36.9kg

These galvanised gates have pins to hold them in the open position. A pivoting latch mechanism connects to the Guardrail / Gate restraint to secure the gates in the closed position.

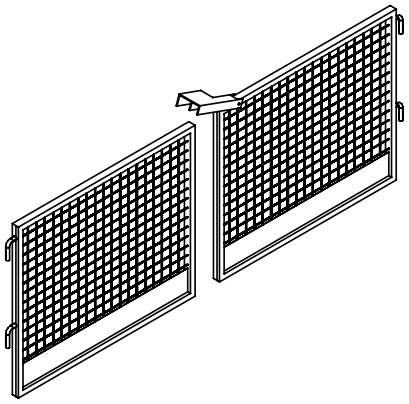

Guardrail / Gate Restraint
Self weight = 22.0kg

This component is formed from galvanised steel tube and is fixed to the upper handrail on each side of the loading bay by means of a half coupler hinge. In the open position it forms a barrier between the main scaffold platform and the loading bay deck. In the closed position it forms a guardrail at the front ot the loading bay and an attachment point for the the gate latch.

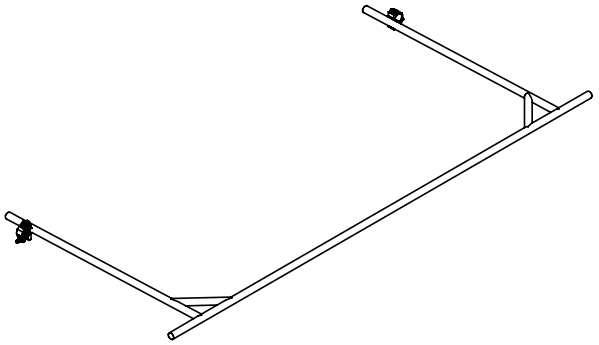

Section 2:

Erection Guide

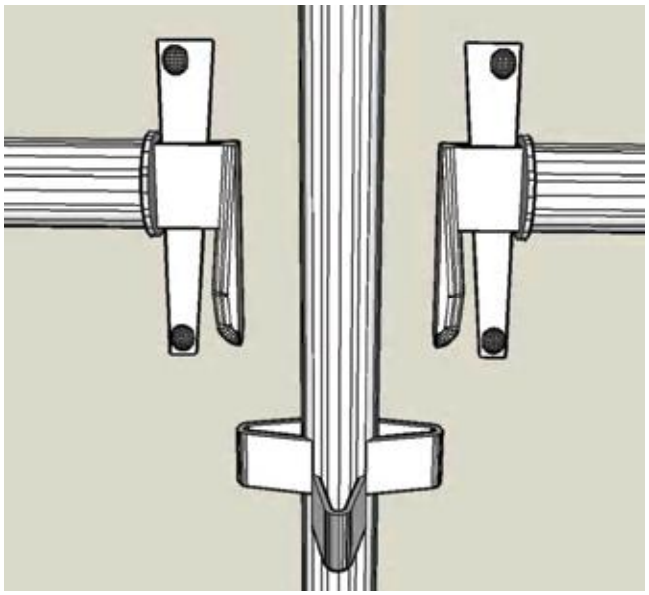

1 Establish the setting out of the scaffold, the foundation levels, and the levels at which working platforms are required. Plan to erect the scaffold in a continuous sequence, starting from a convenient point such as the highest ground level corner of the building.

2 Ensure that there is adequate foundation and provide suitable sole plate to spread the load from the scaffold.

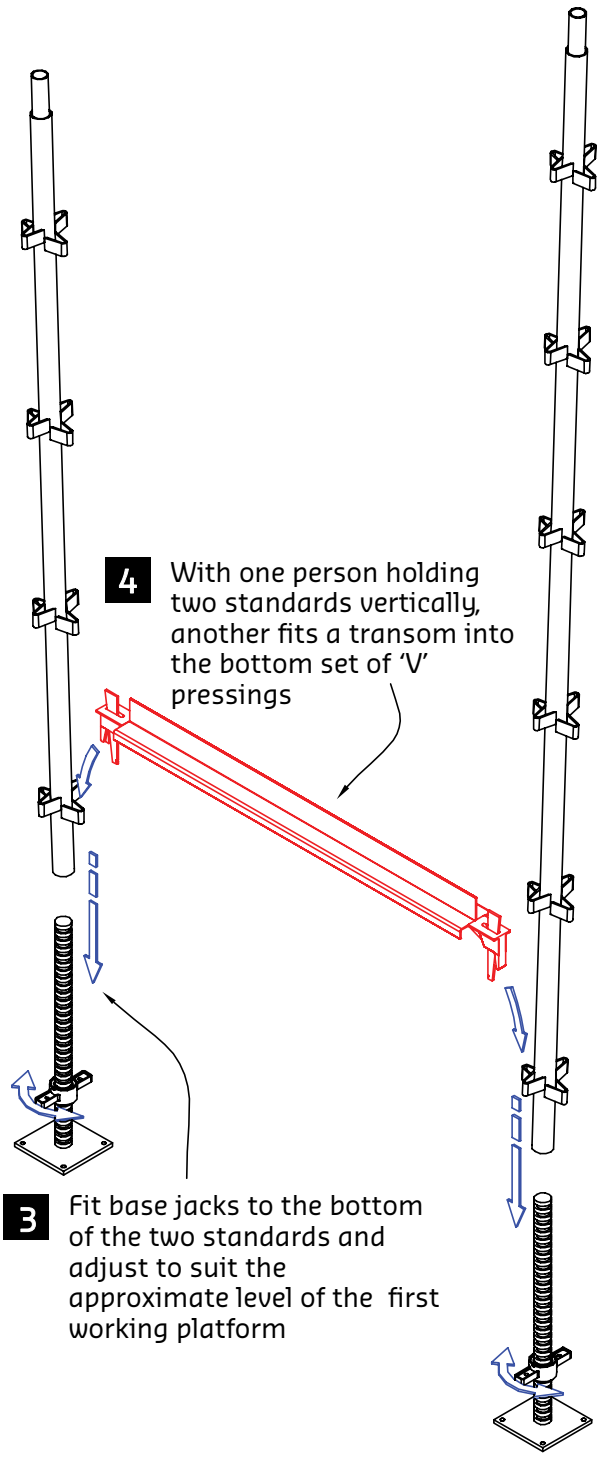

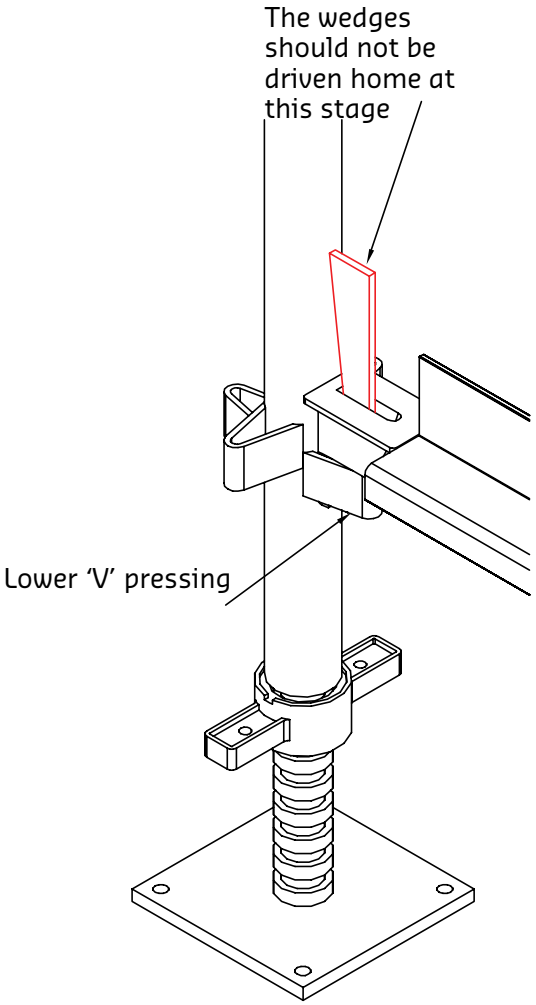

5 With standards held upright, the second person fits two ledgers into the 'V' pressings as shown.

The standards can then lean over since they are supported by the free ends of the ledgers.

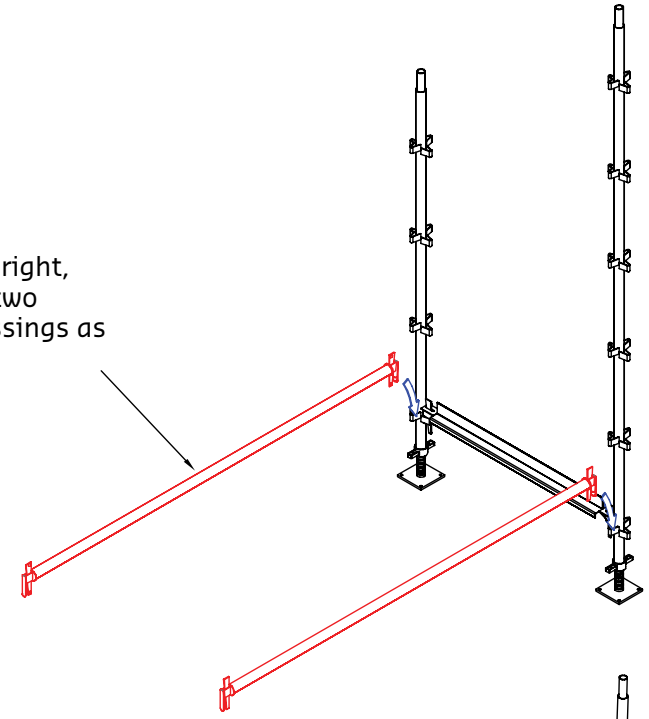

6 Standards equipped with base jacks are then fitted to the free ends of the ledgers

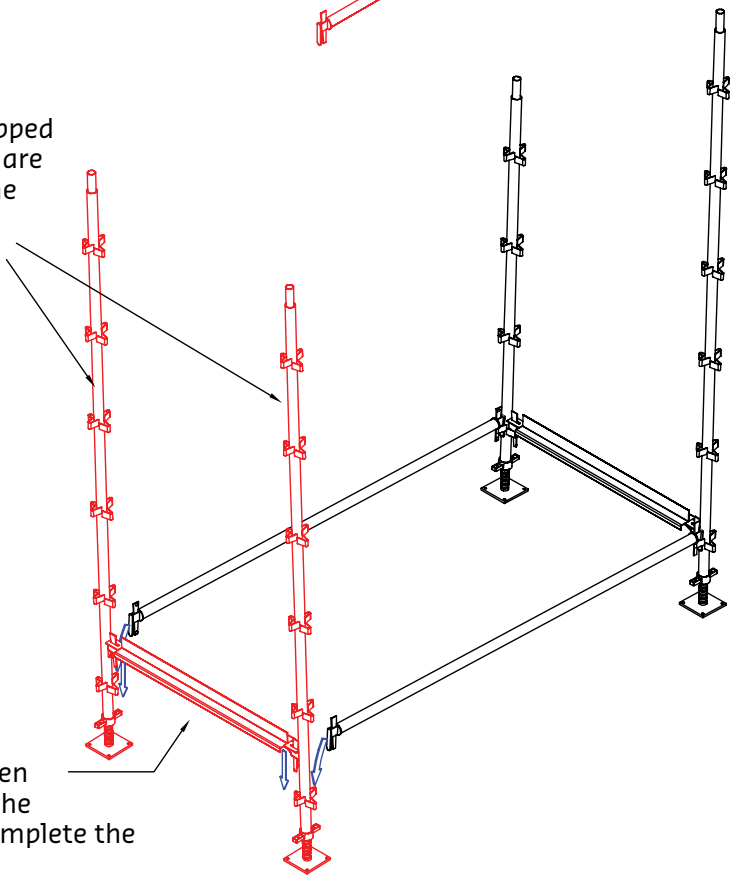

7 A transom is then fitted between the standards to complete the base lift.

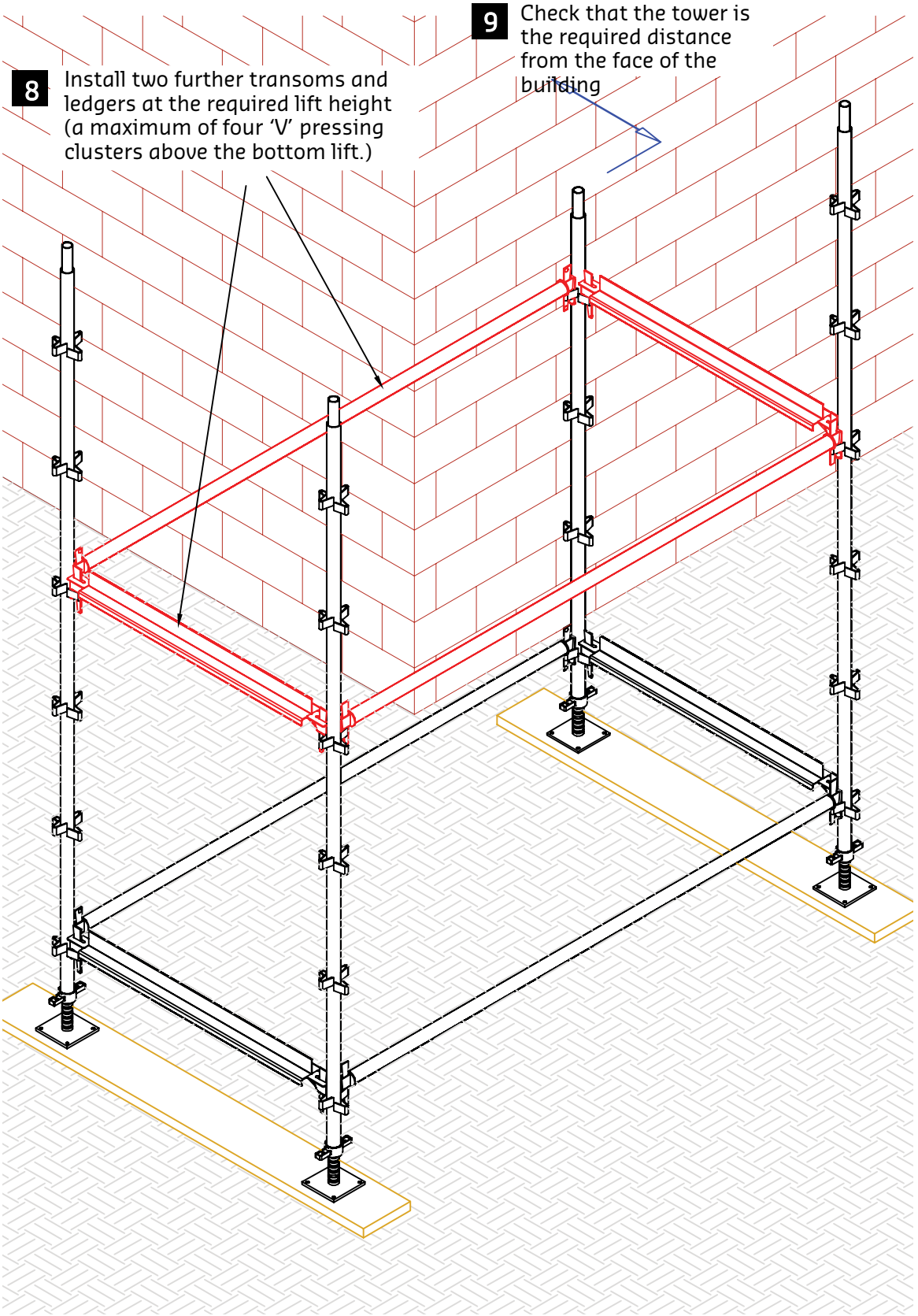
8
Install two further transoms and ledgers at the required lift height (a maximum of four 'V' pressing clusters above the bottom lift.)
9
Check that the tower is the required distance from the face of the building

External Corners

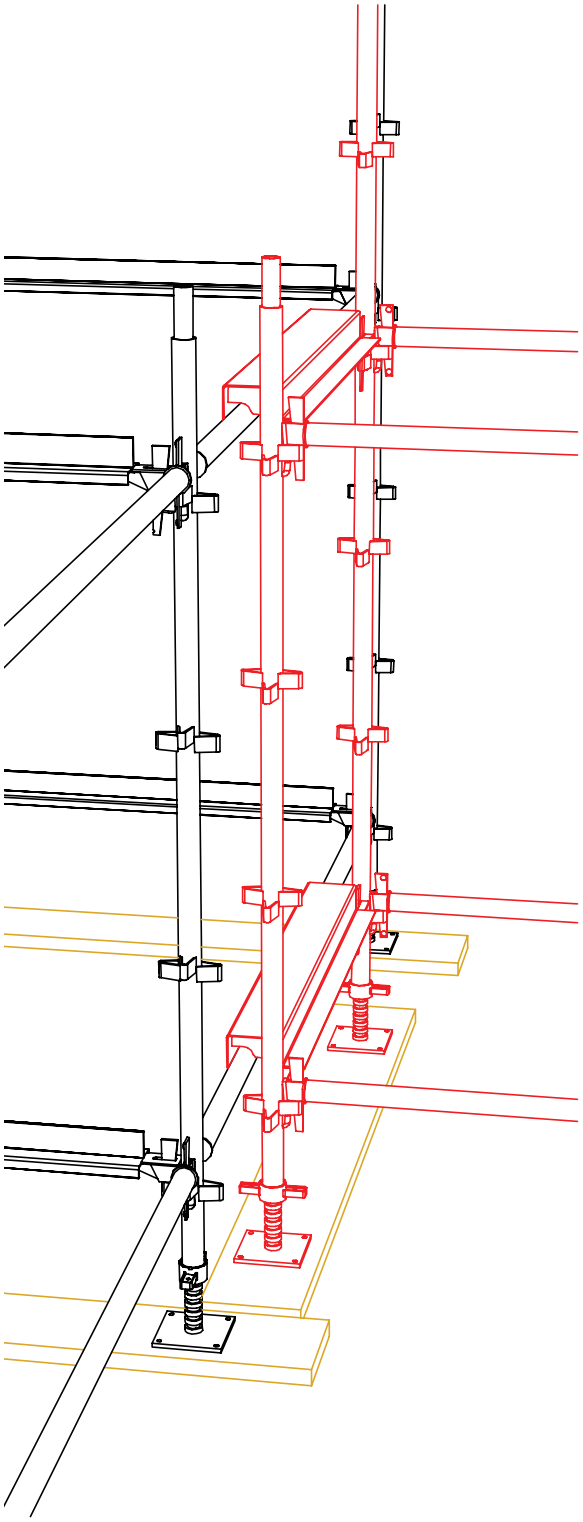

10 If starting from an external corner of a building, position a standard, equipped with a jack, alongside the inner pair of ledgers in the already erected tower. This will form the inside standard of the scaffold return.

11 Make sure the the standard is the required distance from the face of the building, then adjust the jack so that the top of the higher 'V' pressing is level with the underside of the ledger in the tower.

12 With one person holding this standard in position, a second person hooks a return transom over the bottom ledger in the tower and connects it to the bottom 'V' pressing in the standard.

13 A second standard with a jack is then connected to the return transom to form the outside standard of the scaffold return. Another return transom is then fixed at the level of the upper ledger in the tower.

14 Further ledgers, standards and transoms can then be fixed in the same manner as previously described.

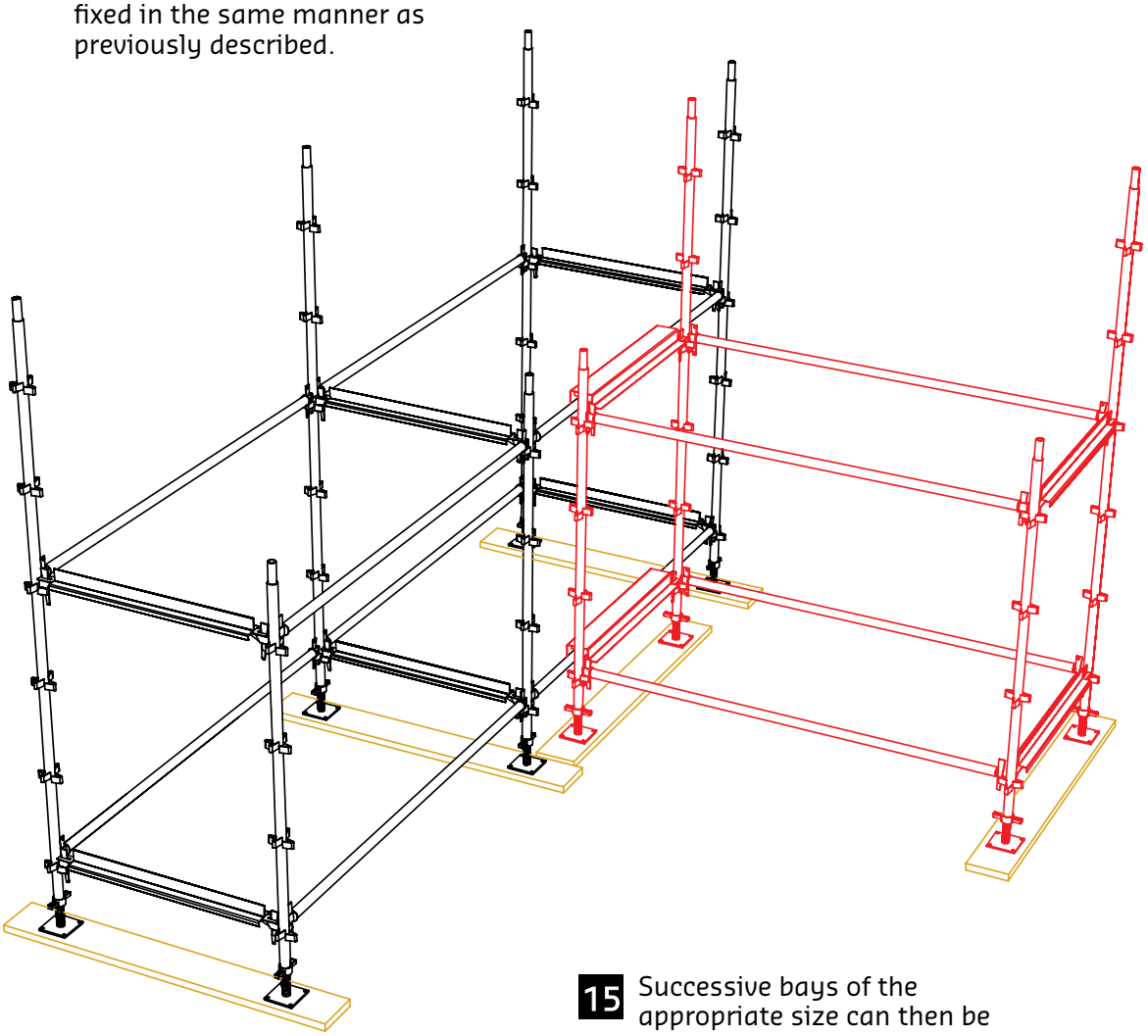

15 Successive bays of the appropriate size can then be erected in the same manner, remembering where possible to work continuously in one direction.

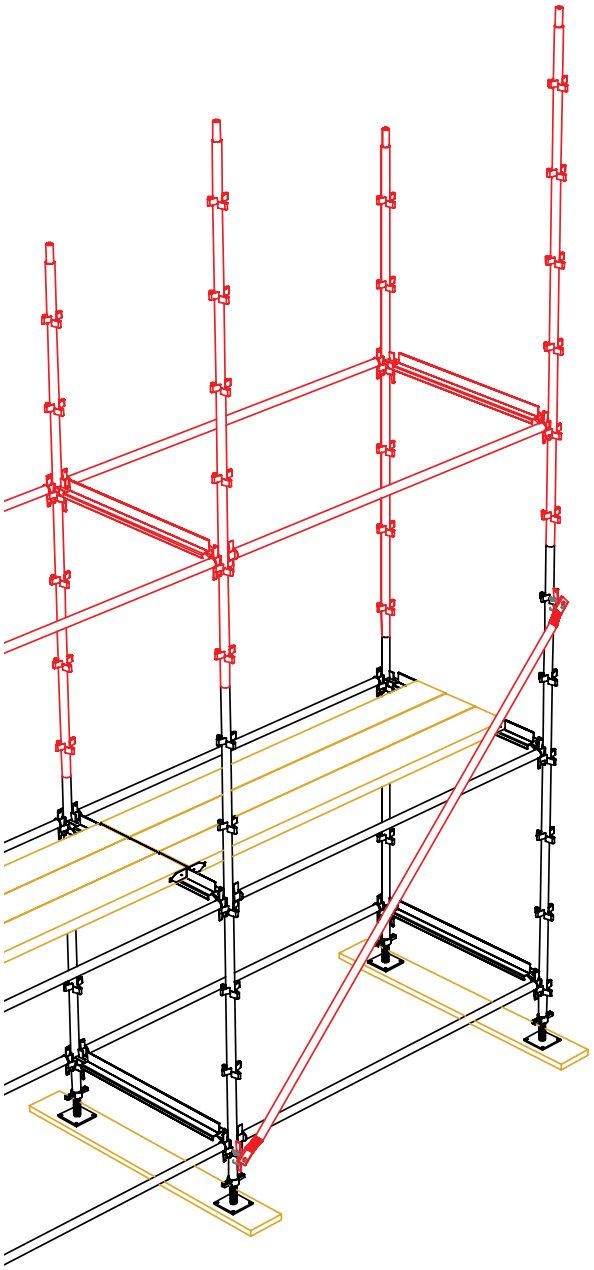

16 Before erecting the next lift, place an appropriate number of battens in position on the existing lift, the battens should span between the transoms with the ends resting on the horizontal flange of the transom, this will form a safe platform from which to work.

17 Using a ladder to gain access to this platform, fix standards, ledgers transoms and return transoms in the same manner as previously described.

18 Fix diagonal braces, as required, (see bracing patterns for details.) The diagonal brace is fitted to the outside of the outer standard, this is a two person operation which requires both ends to be placed into the 'V' pressing simultaneously. Once into position the wedges on the brace can be driven home.

19 Continue erecting the scaffold in the sequence and manner described. Always work from a safe platform and progressively fix ties into the building (see tie pattern for detail).

20 When the level of the working platform is reached, deck out a bay with battens of the appropriate length to suit the bay size.

21 Fix ledgers to the outside standard to form the guardrails. These secure to the first and second 'V' pressings above the working platform.

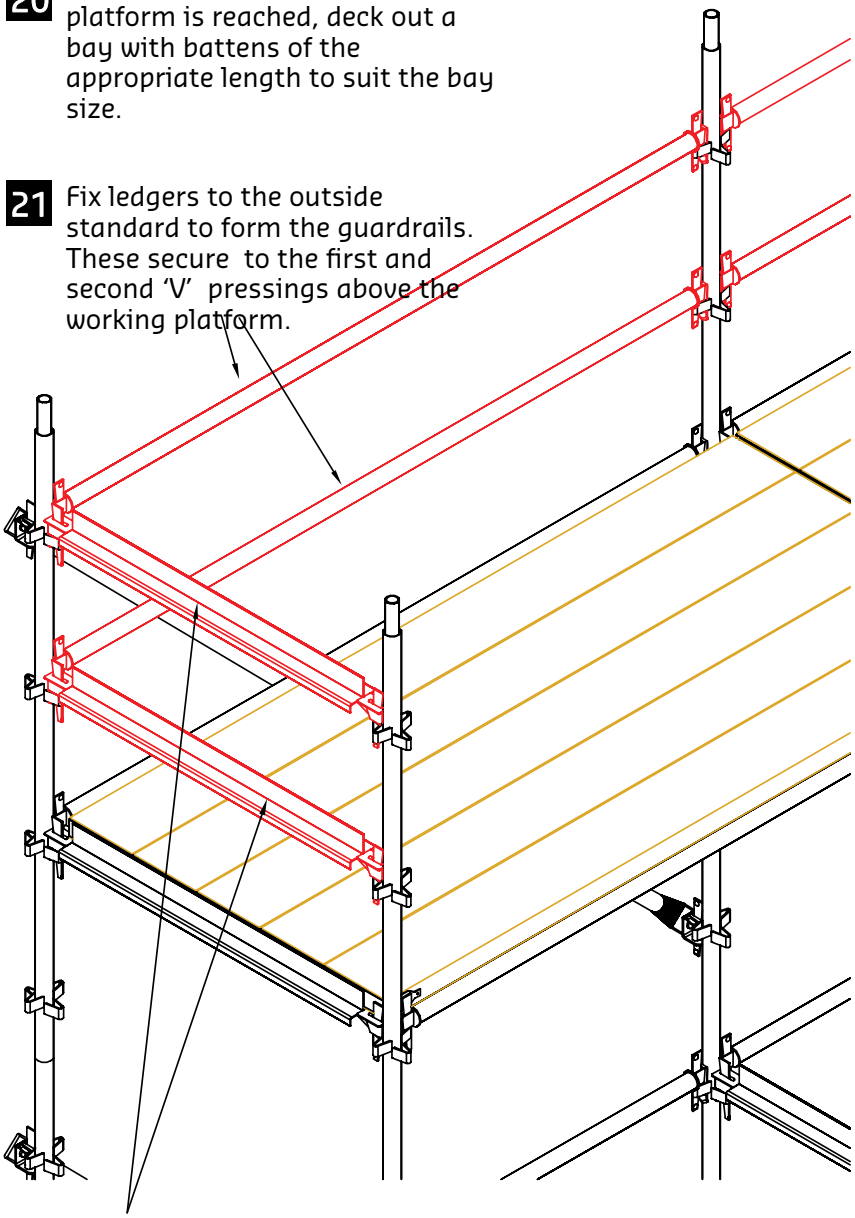

22 At the ends of the scaffold runs fix transoms to form the guardrails.

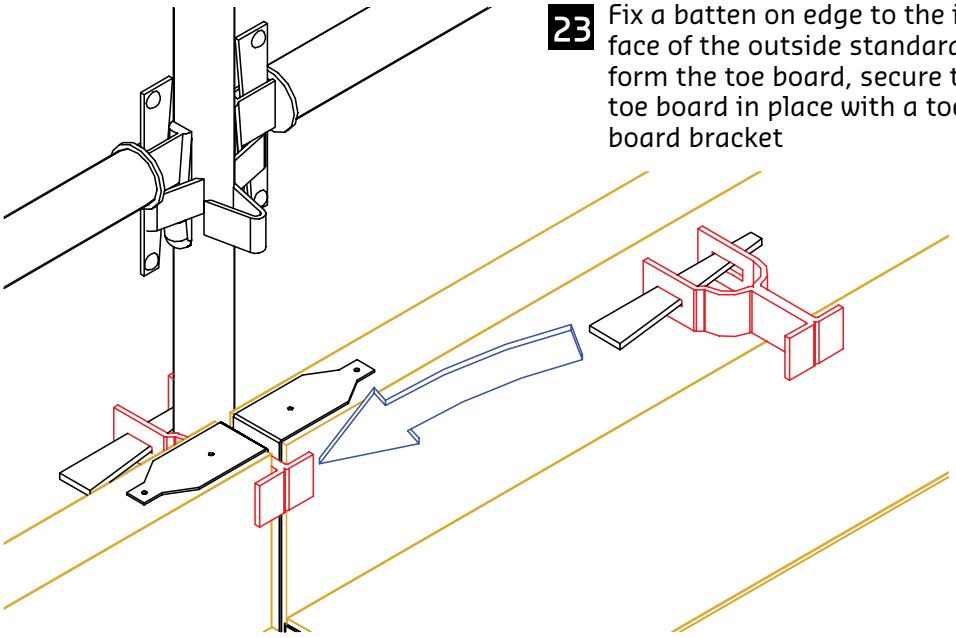

23 Fix a batten on edge to the inner face of the outside standard, to form the toe board, secure the toe board in place with a toe board bracket

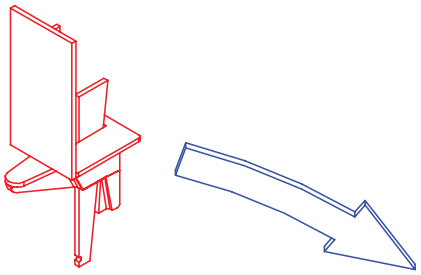

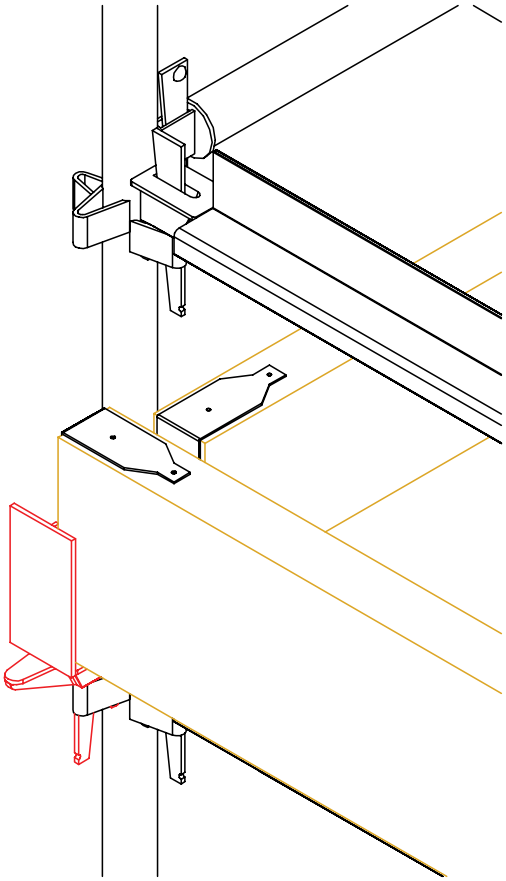

24 Secure a 1.2m batten in place to form the end toe board this is held by means of the end toe board bracket

Climastage Safety Harness Lanyard Attachment Locations

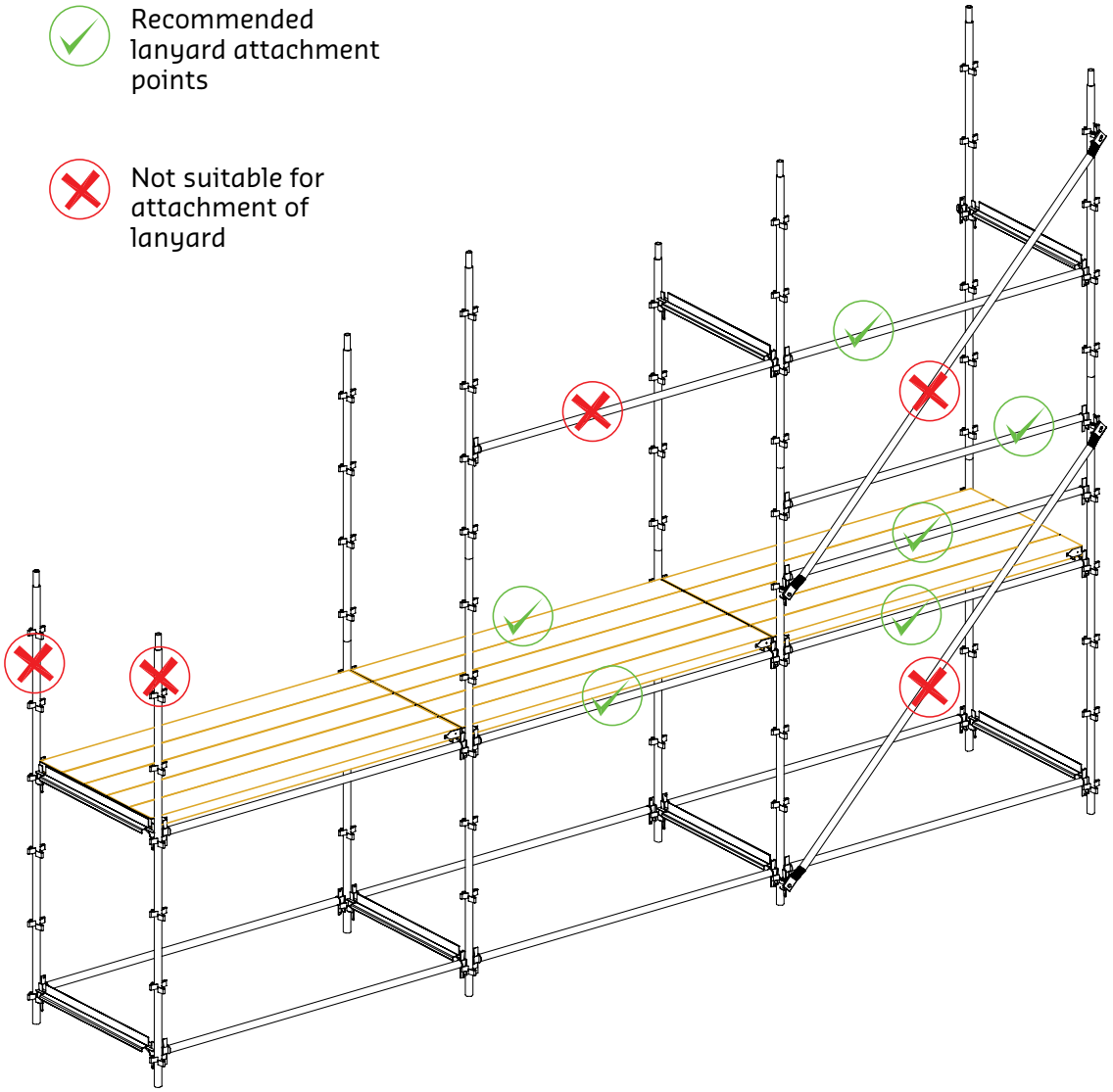

Correct Fitting of Tie Bars

All two and three board stage brackets must be connected with Tie bars.
Tie bars are to be fitted before any decking is laid down. When dismantling, the decking must be removed before the tie bar.

NEVER stand on the cantilevered platform when removing the tie bar.

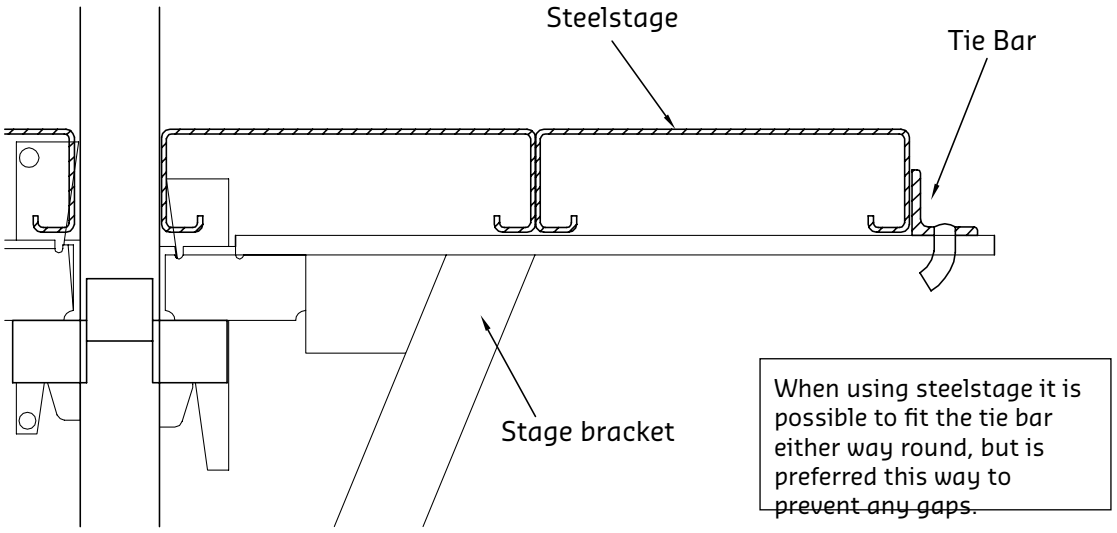

Tie Bars with Steelstage

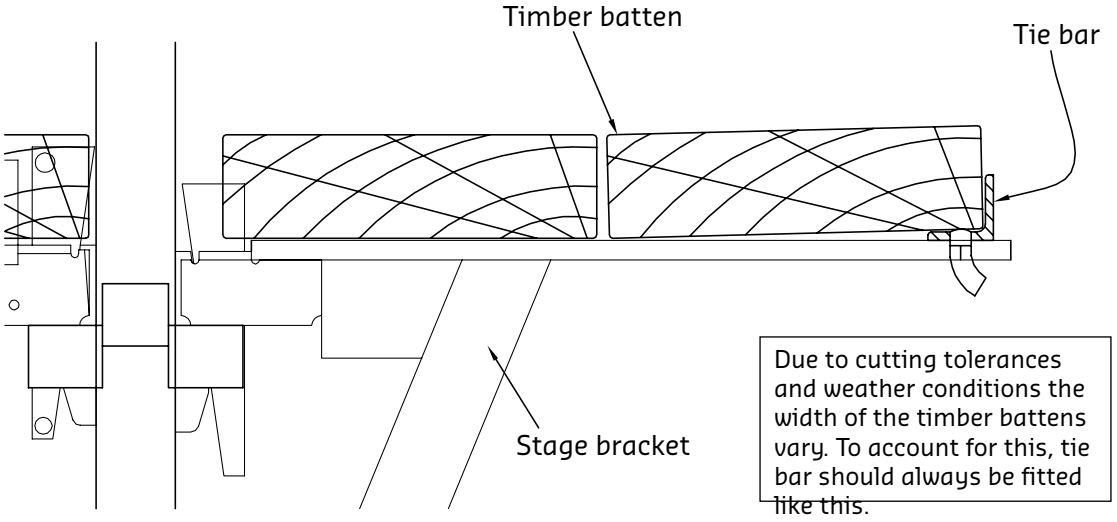

Tie Bars with Timber Battens

Bracing Pattern

Façade bracing should be fitted over two bays every six bays, i.e. four bays clear as shown below. In the case of tie pattern 9(a) and 9(b), the two bays of façade bracing should span across tied standards.

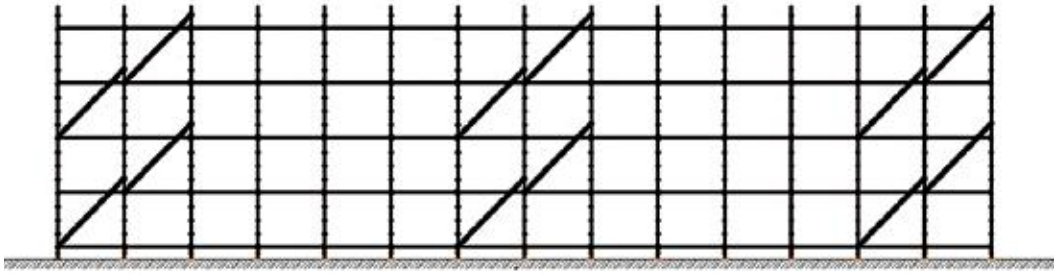

Alternatively the bracing can form a continuous diagonal run from top to bottom of the scaffold. For long elevations the bracing should return to the bottom of the scaffold with no more than four unbraced bays.

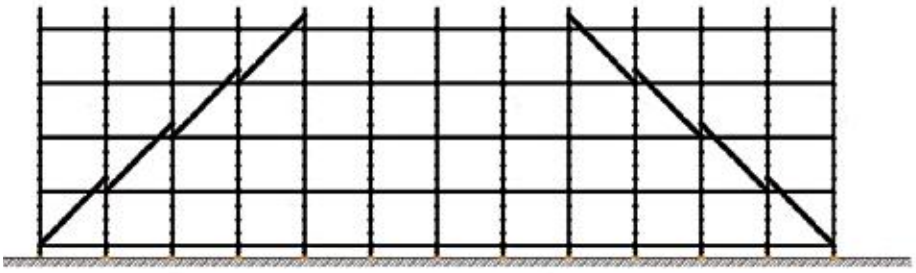

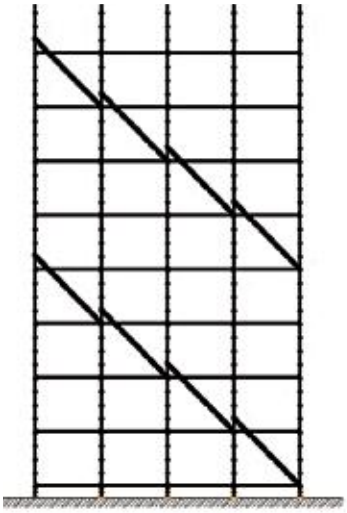

On tall elevations where a single run of diagonal bracing does not reach the top of the scaffold, then further runs of bracing are required untill the top of the scaffold is reached.

Tying Patterns

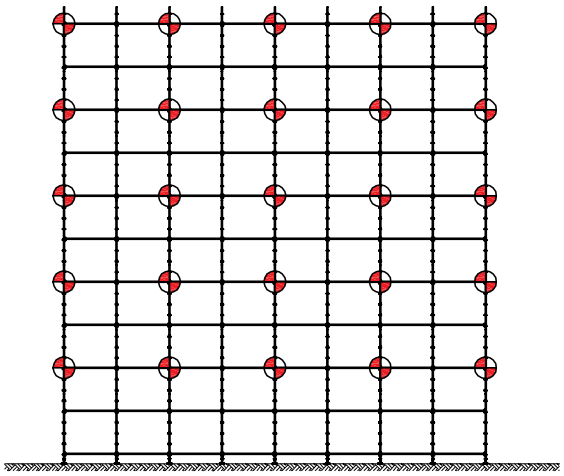

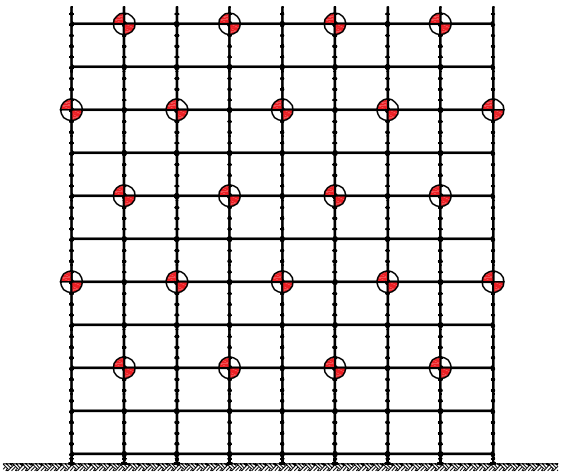

Ties at alternate lifts

Pattern 9(a) n 9(b)

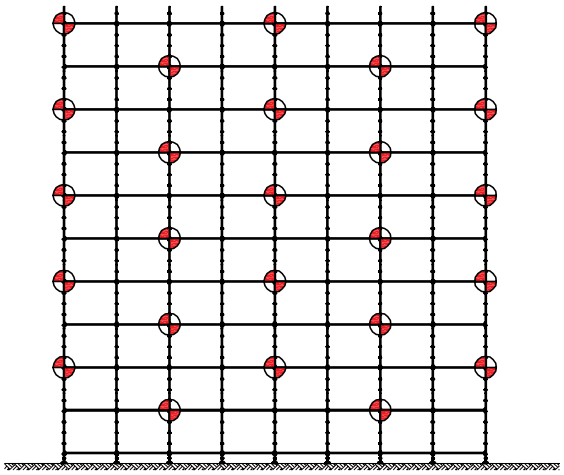

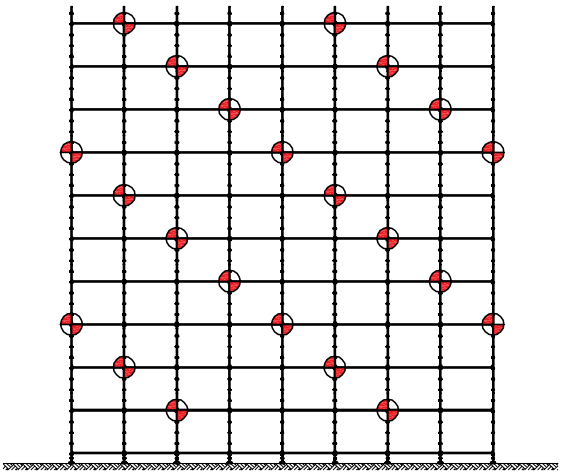

Ties at every lift

Pattern 9(c) n 9(d)

This page is left blank intentionally

Section 3:

Standard Solutions

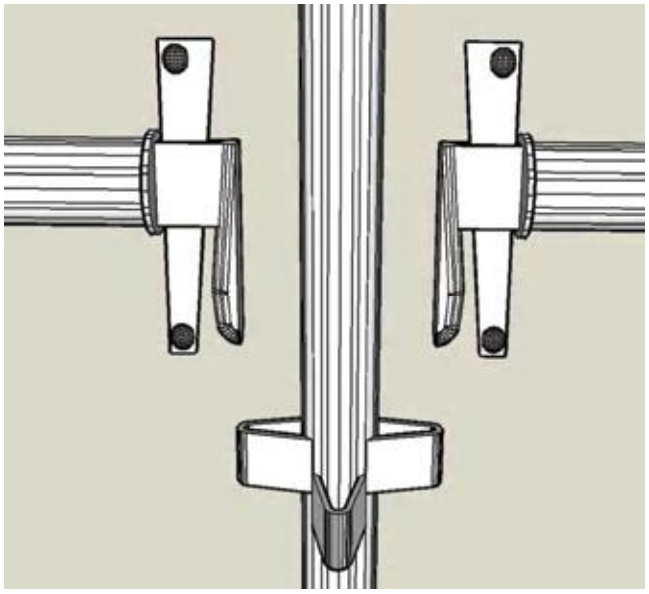

Untied Climastage Layout

Drawing No. 08/MA/01/3063/1-1

DETAILS SHOWN ARE FOR UNSHEETED SCAFFOLDS UP TO THE HEIGHT OF 6.0m

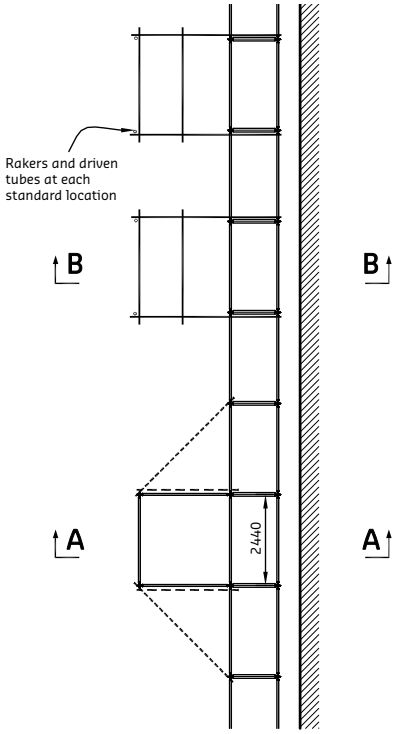

PLAN

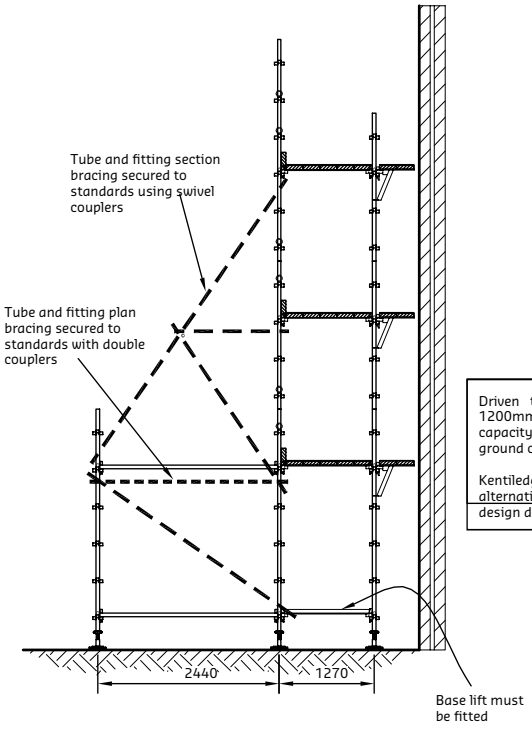

TYPICAL BUTTRESS CROSS SECTION A-A

Driven tube to a depth of approx 1200mm at an angle of 45º. The capacity of anchor is dependent on ground conditions.

Kentiledge may be used as an alternative, seek advice fron the design department.

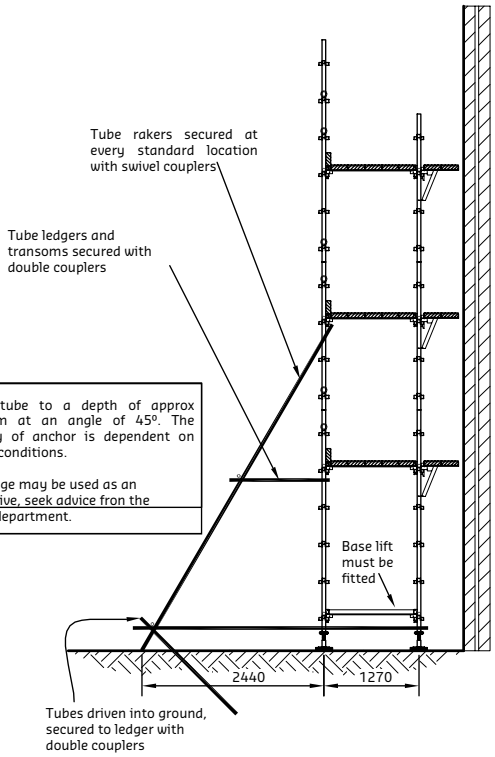

TYPICAL RAKER CROSS SECTION B-B

Untied Climastage Layout

Drawing No. 08/MA/01/3064/1-1

DETAILS SHOWN ARE FOR UNSHEETED SCAFFOLDS UP TO THE HEIGHT OF 6.0m

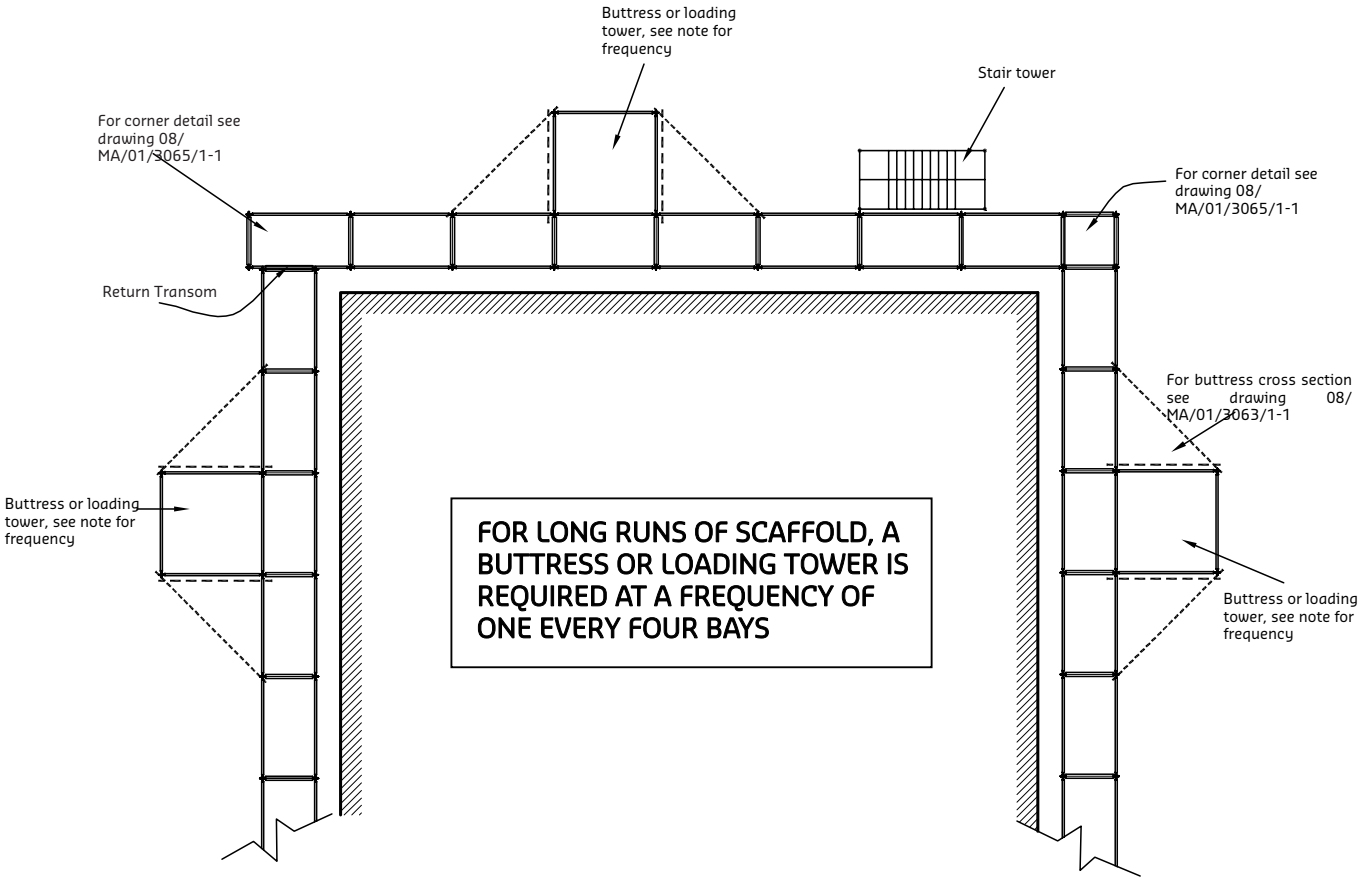

TYPICAL ARRANGMENT FOR UNTIED CLIMASTAGE SCAFFOLD

800mm Wide Climastage Layout

Drawing No. 08/MA/01/3066/1-1

DETAIL SHOWN IS FOR UNSHEETED SCAFFOLDS UP TO THE HEIGHT OF 6.0m

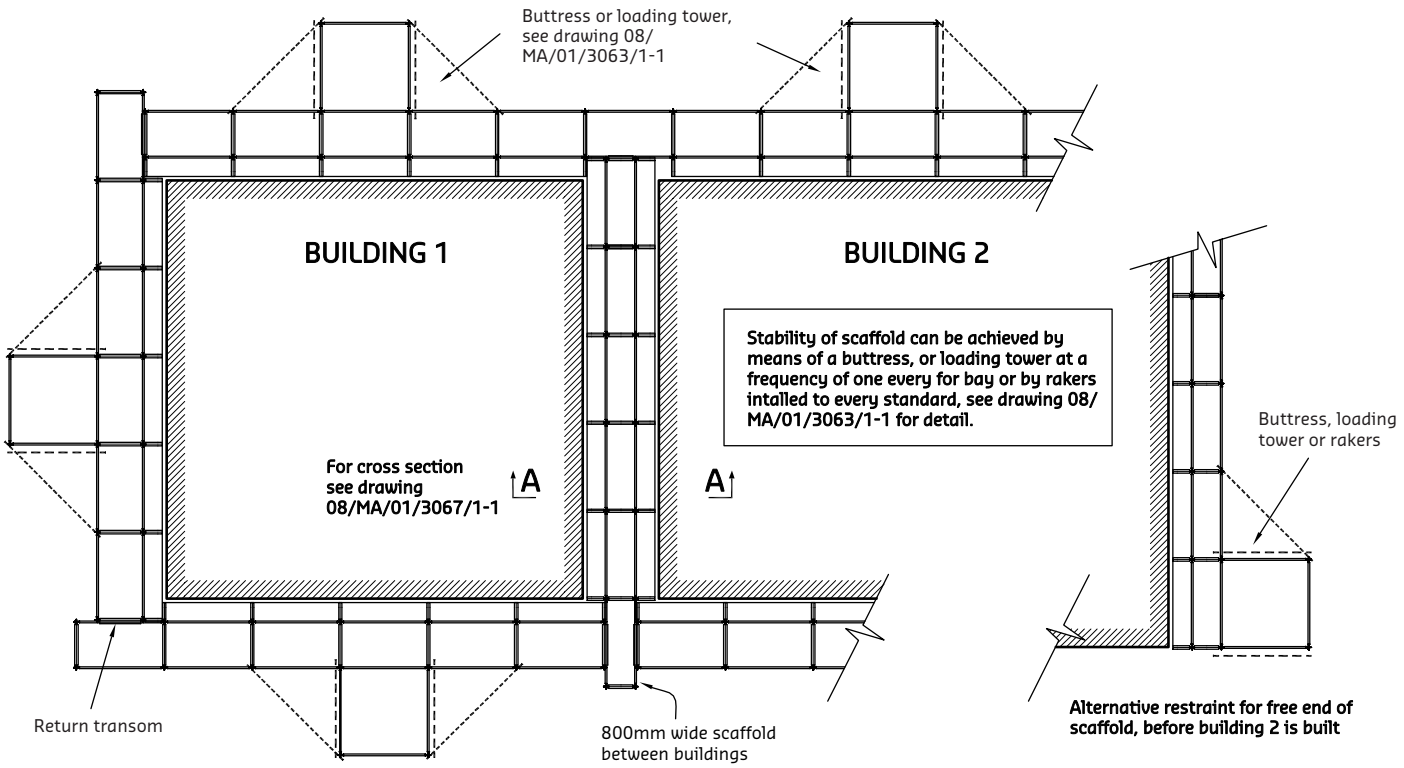

800mm Wide Climastage Layout - Section

Drawing No. 08/MA/01/3067/1-1

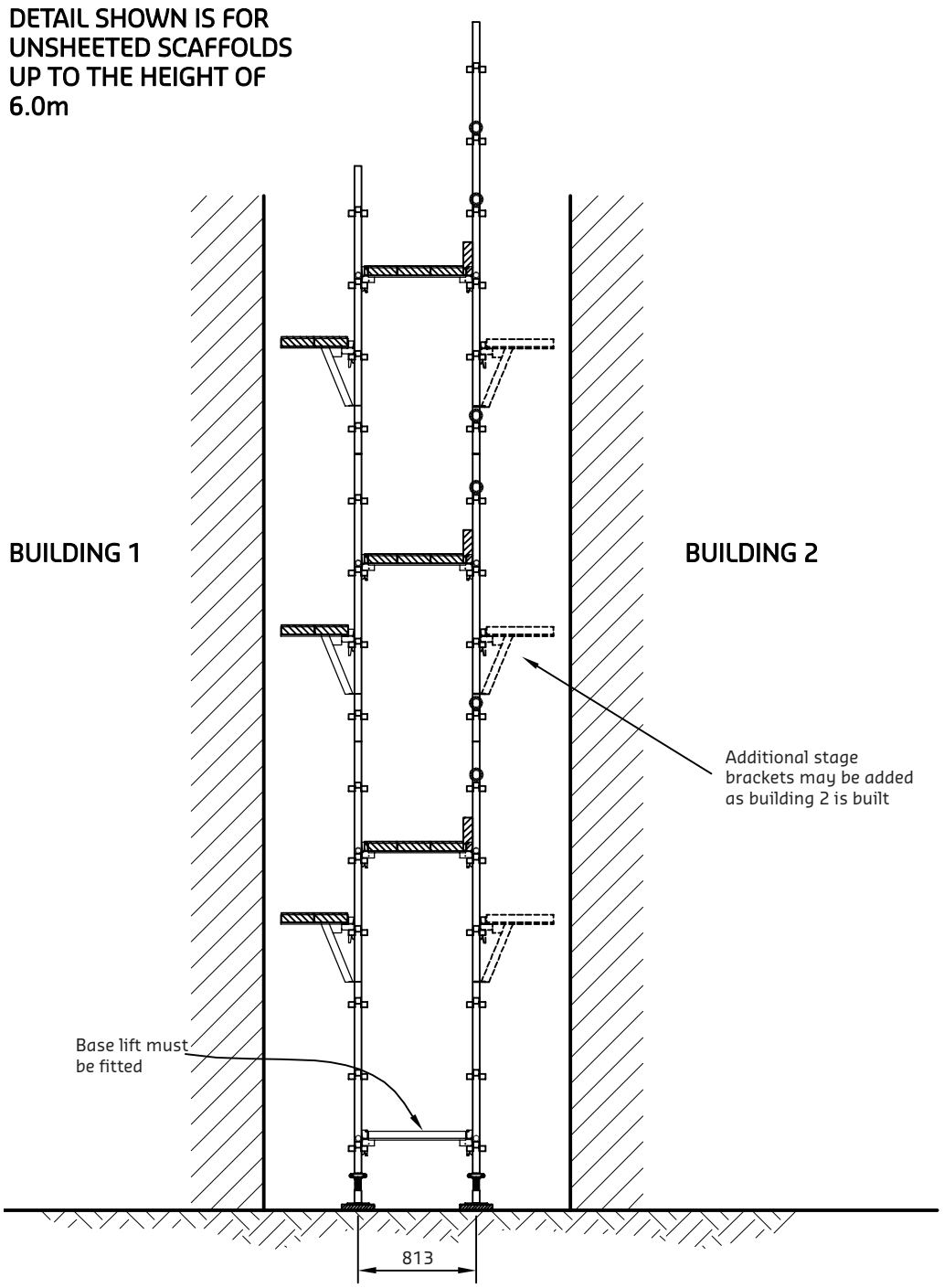

SECTION A-A

Plan details of free standing Climastage Access Scaffolds

Drawing No. 08/MA/01/3065/1-1

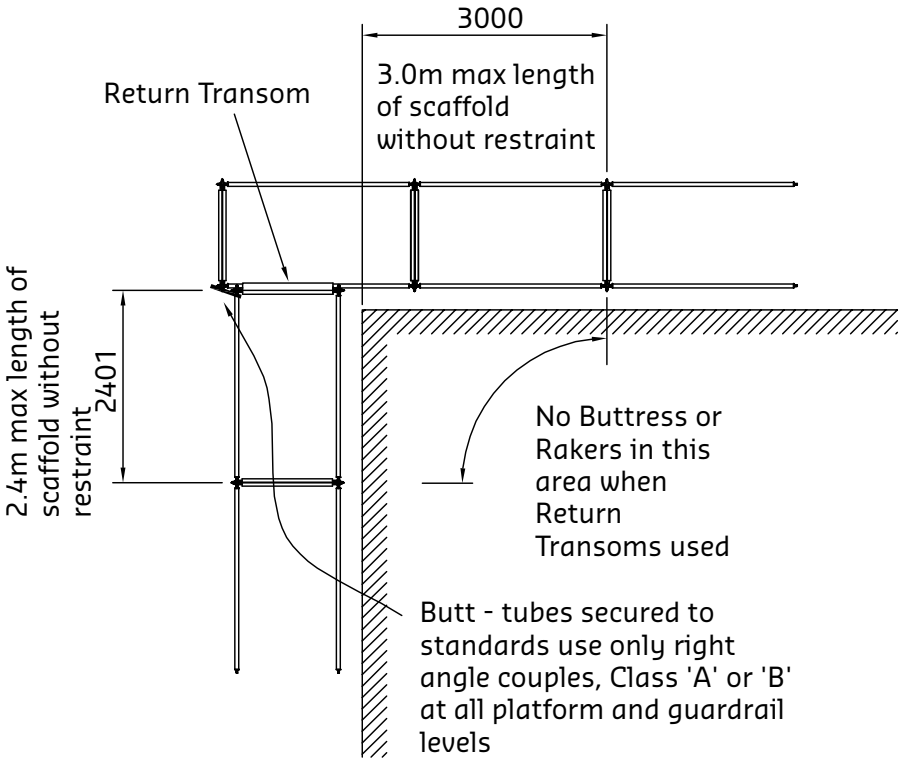

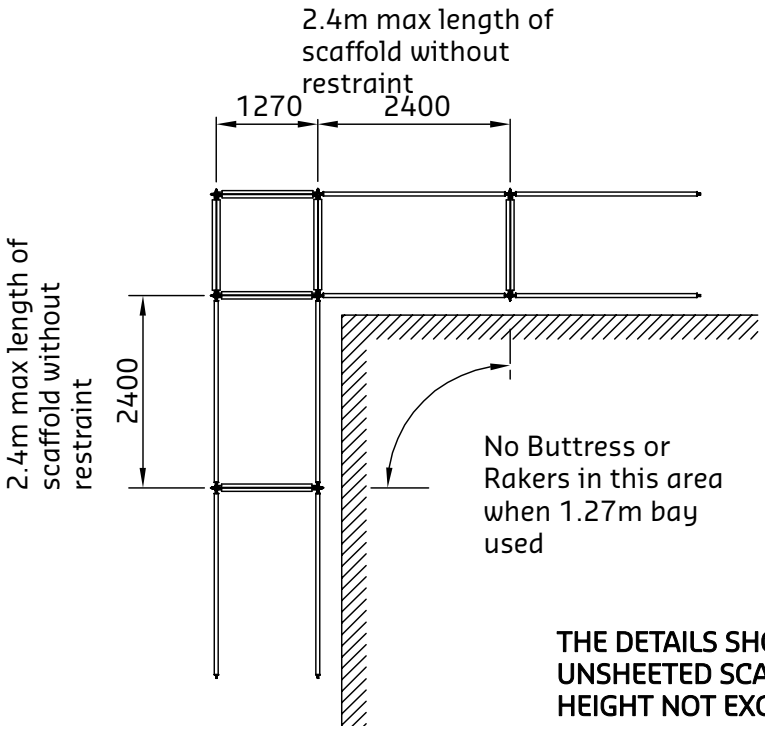

THE DETAILS SHOWN APPLY ONLY TO UNSHEETED SCAFFOLDS TO A MAXIMUM HEIGHT NOT EXCEEDING 6m

Progressive Buttress Scaffold Erection Sequence

Drawing No. 08/MA/01/3067/1-1

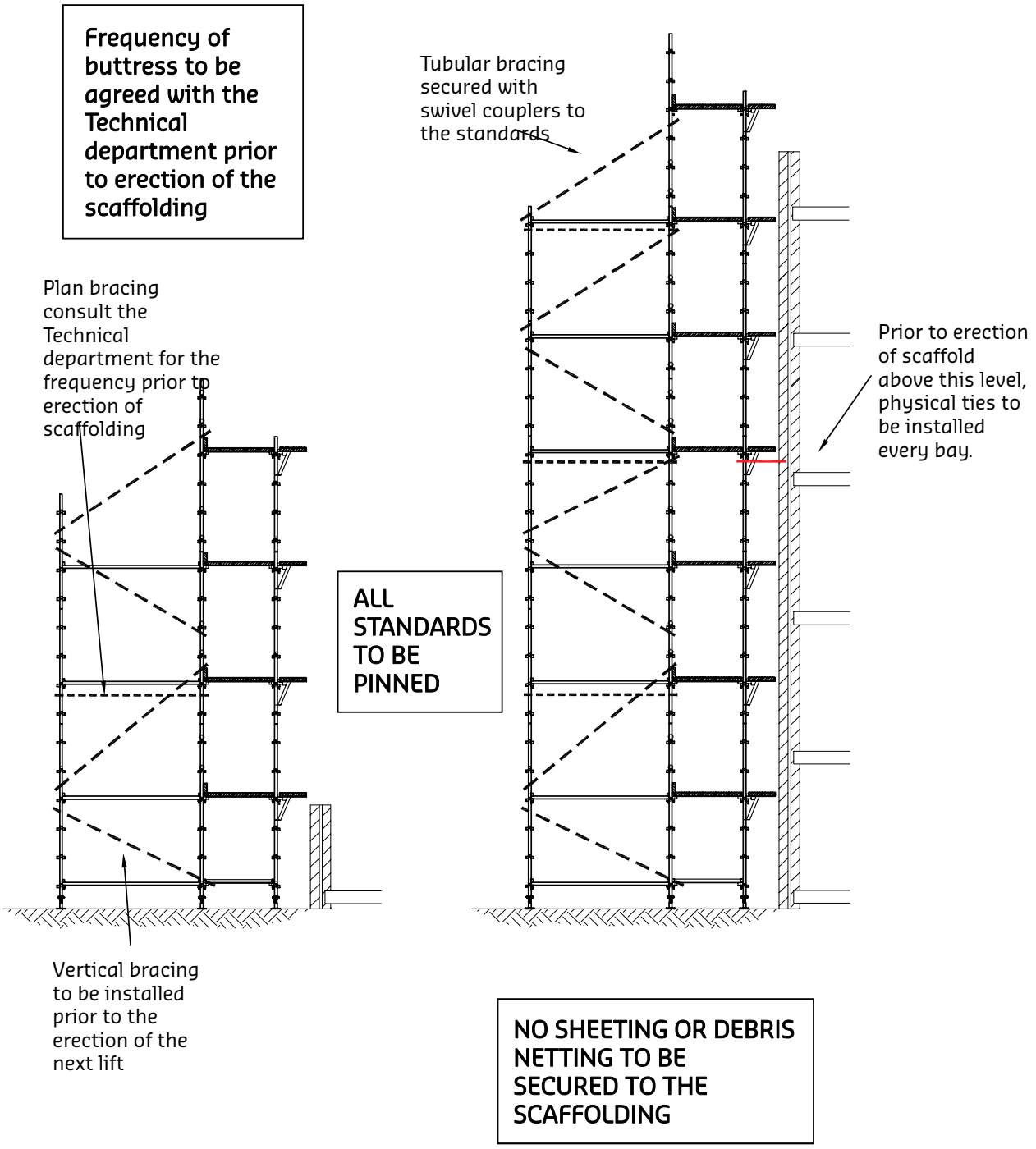

Typical arrangements for 4 and 5 Fan details using tube and fittings

Drawing No. 08/MA/01/3069/1-1

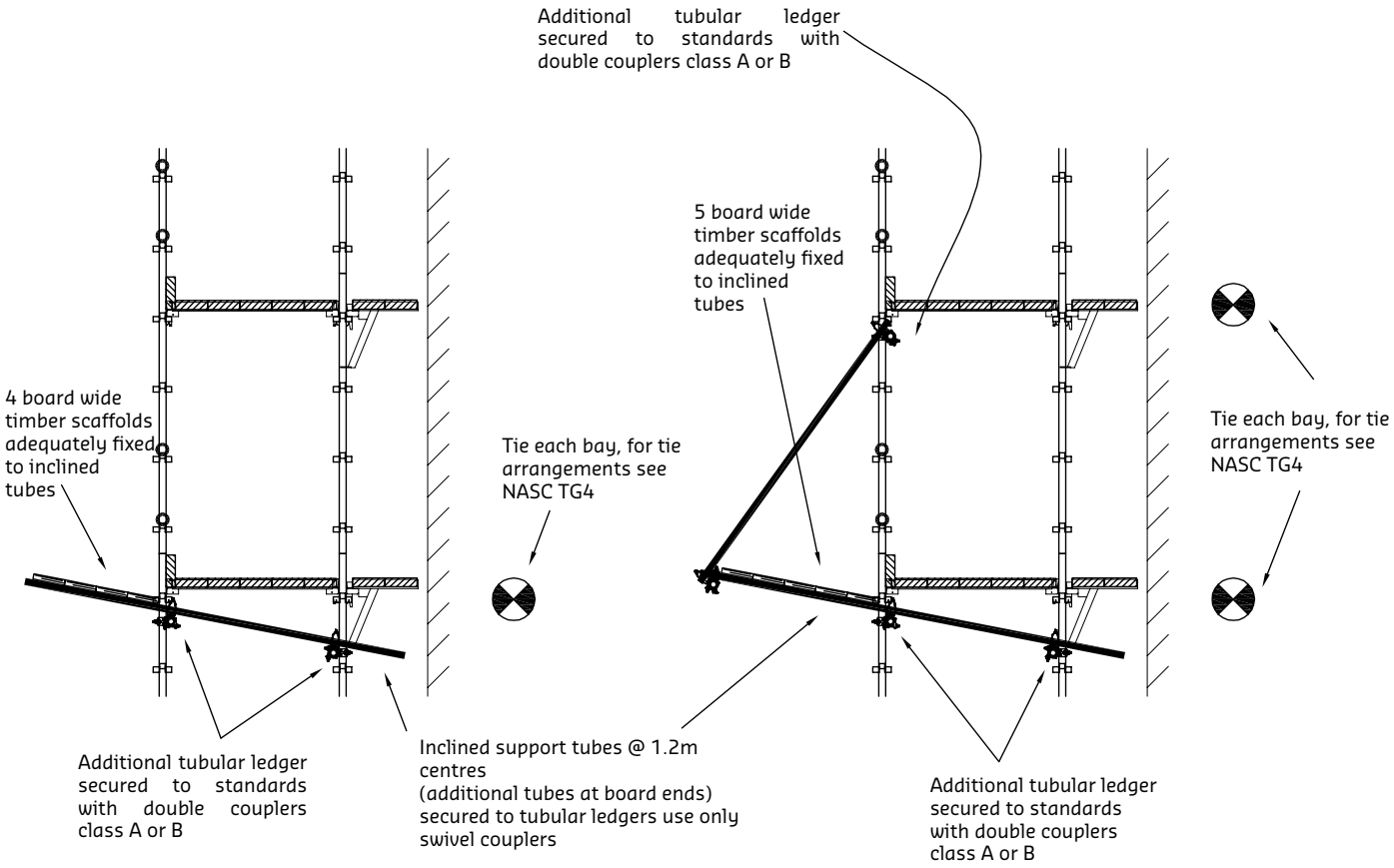

TYPICAL 4 BOARD FAN

TYPICAL 5 BOARD FAN

Double Returns

Drawing No. 08/
STD/01/3122/1-5

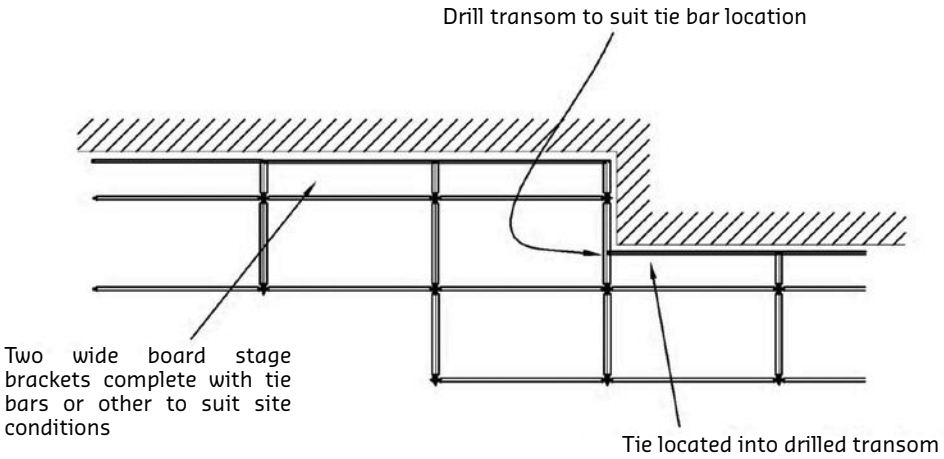

SHALLOW RETURNS

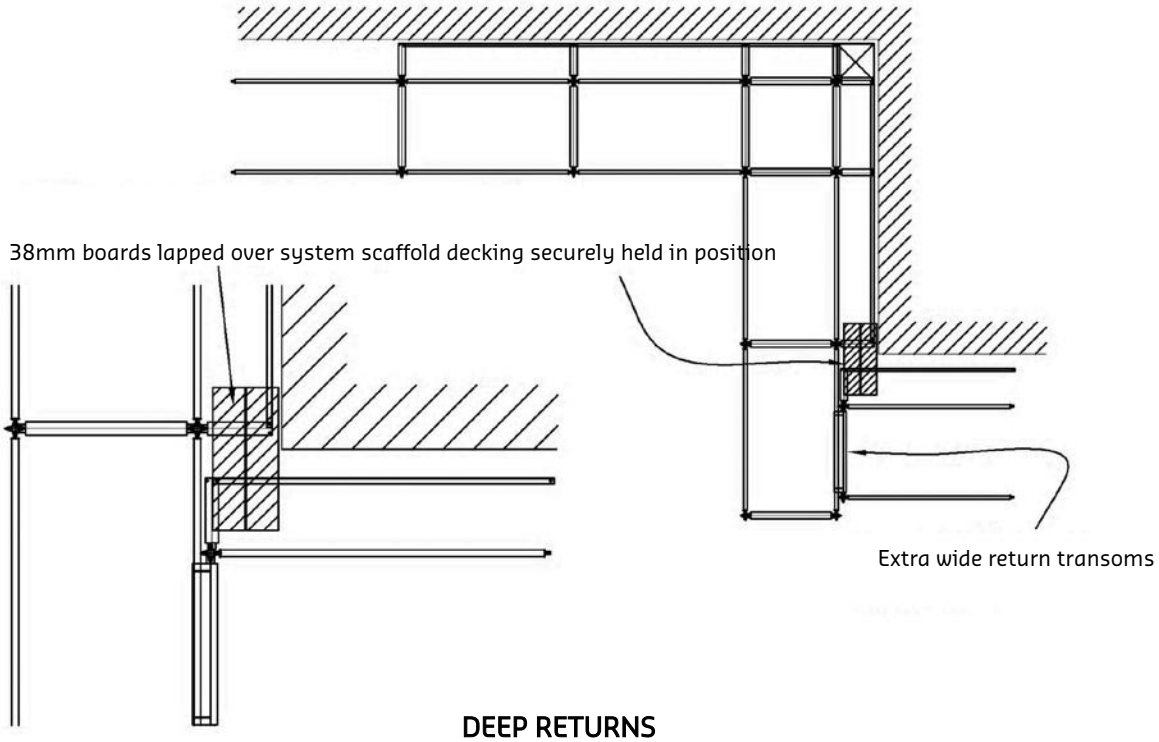

DEEP RETURNS

Alternative Double Returns

Drawing No. 08/STD/01/3122/2-5

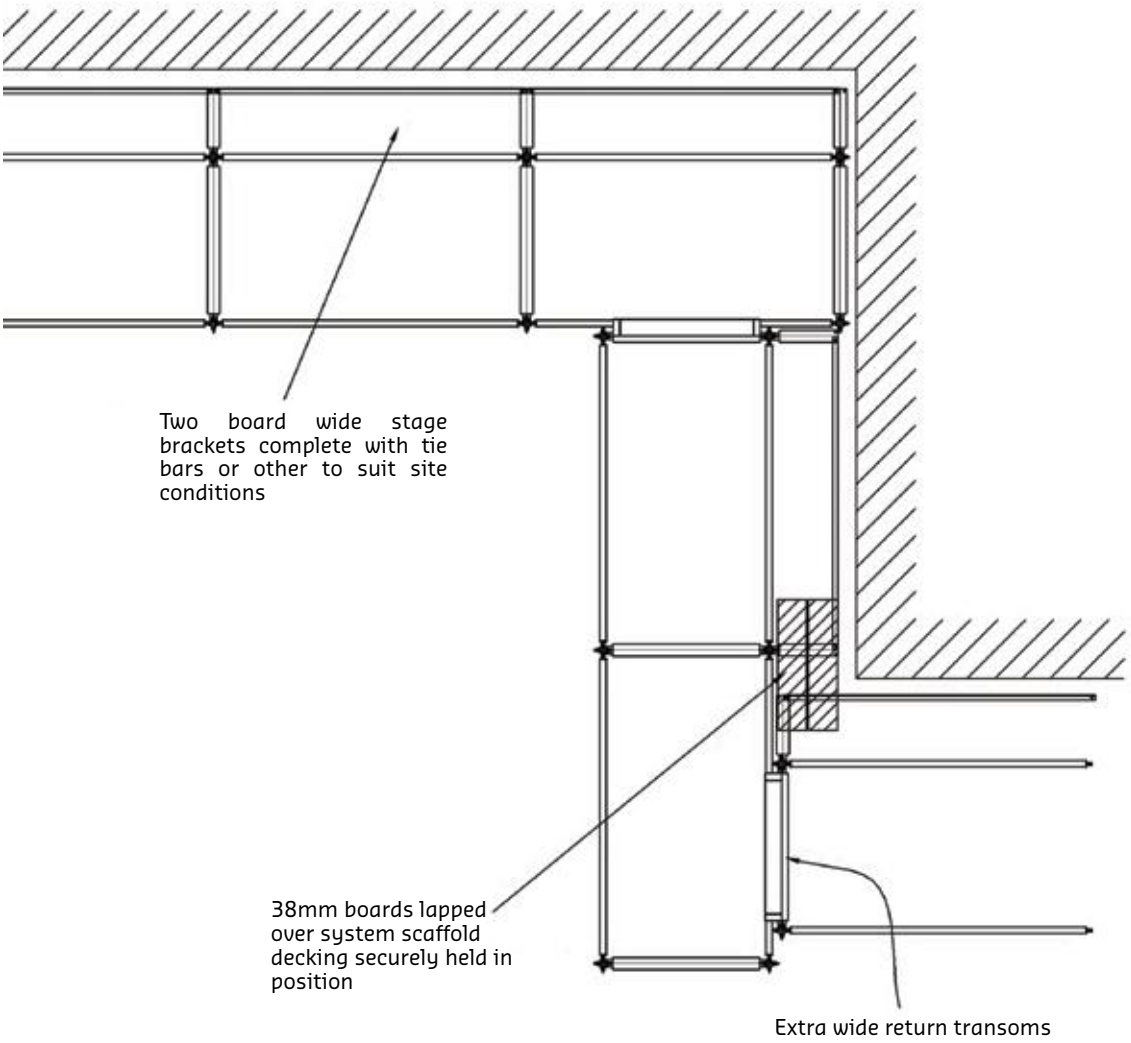

ALTERNATIVE DEEP RETURNS

Recesses and Angled Returns

Drawing No. 08/STD/01/3122/3-5

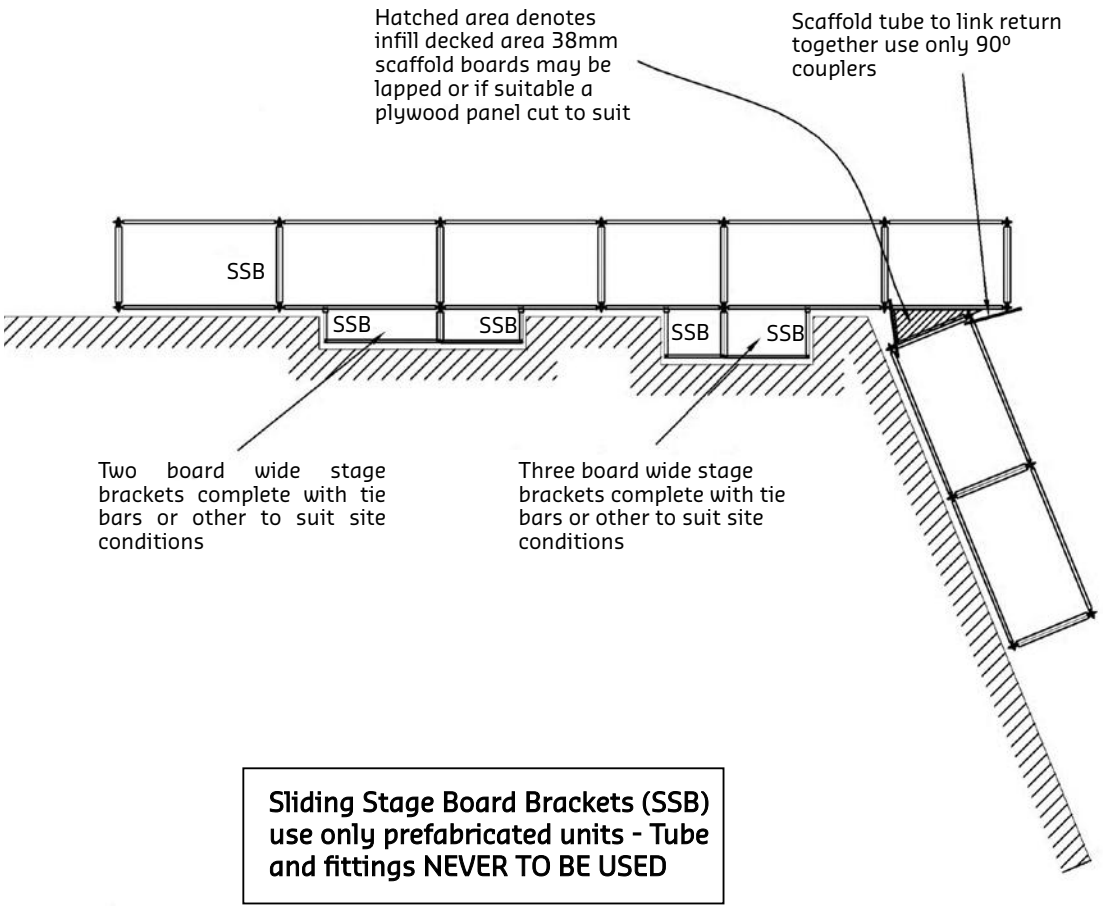

Sliding Stage Board Brackets (SSB) use only prefabricated units - Tube and fittings NEVER TO BE USED

RECESSES AND ANGLED RETURNS

Recess Detail

Drawing No. 08/
STD/01/3122/4-5

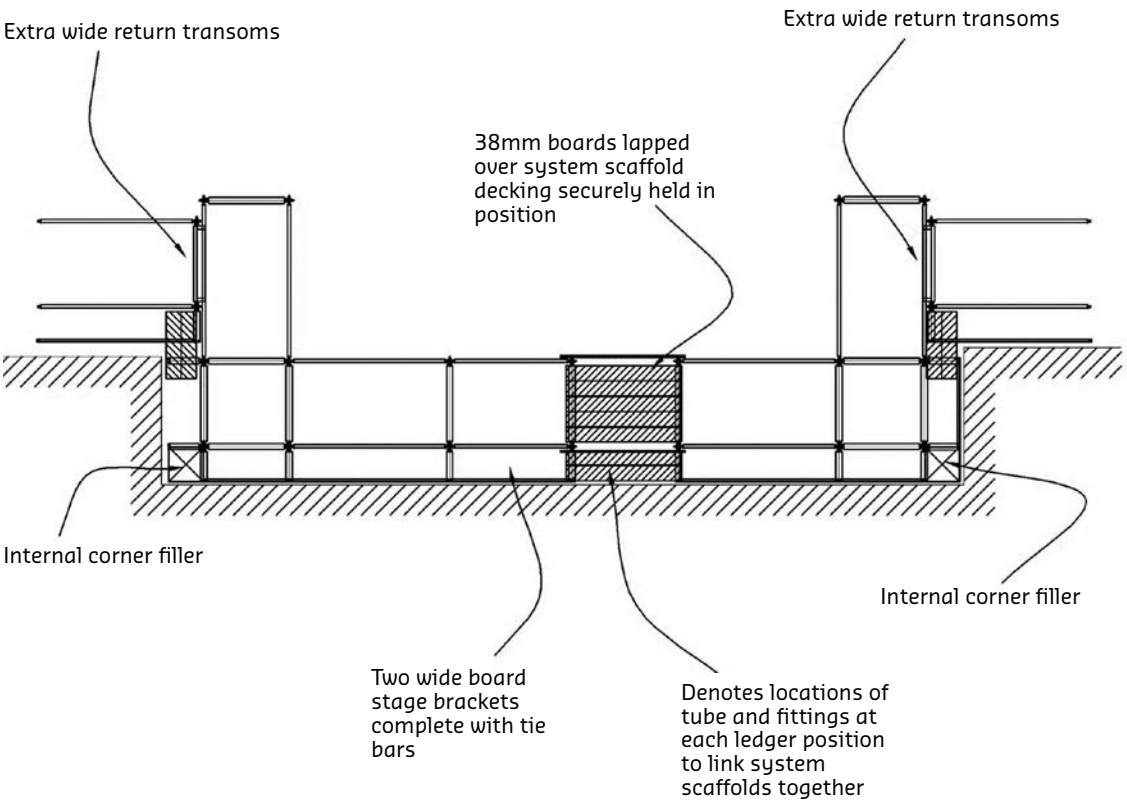

Small Projections

Drawing No. 08/
STD/01/3122/5-5

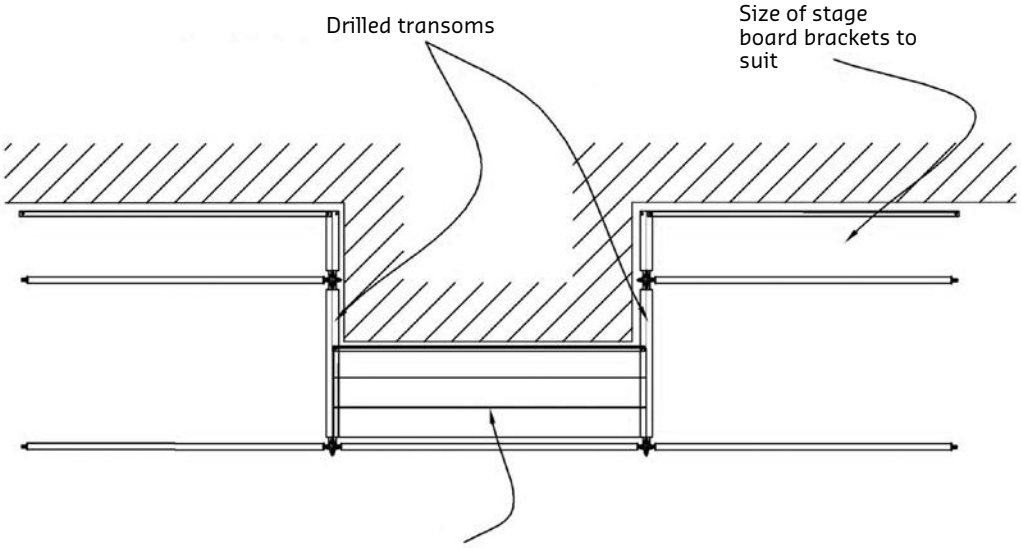

Bay lengths - 2.4m - 1.8m - 1.2m

SMALL PROJECTION

Loading Bay

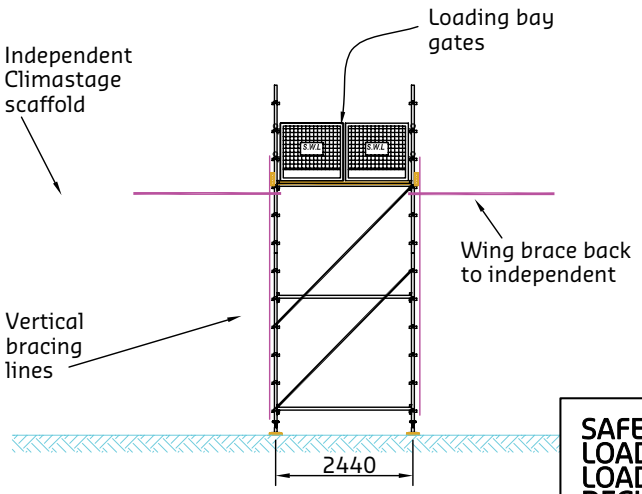

FRONT ELEVATION

SAFE WORKING LOAD FOR LOADING BAY DECK = 2kN/m²

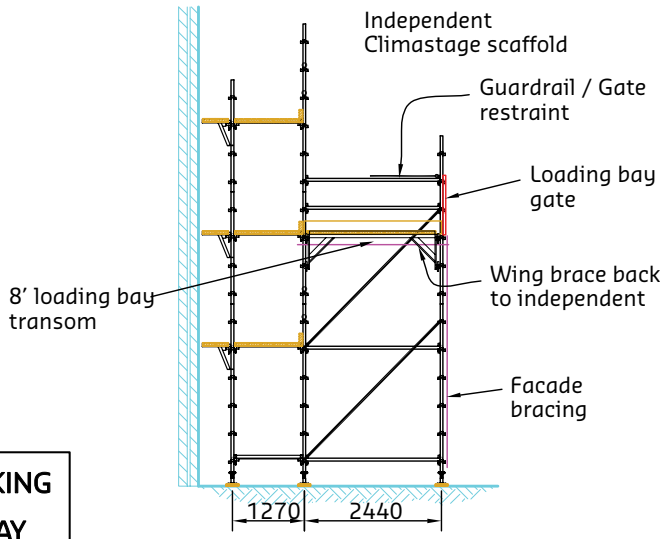

SIDE ELEVATION

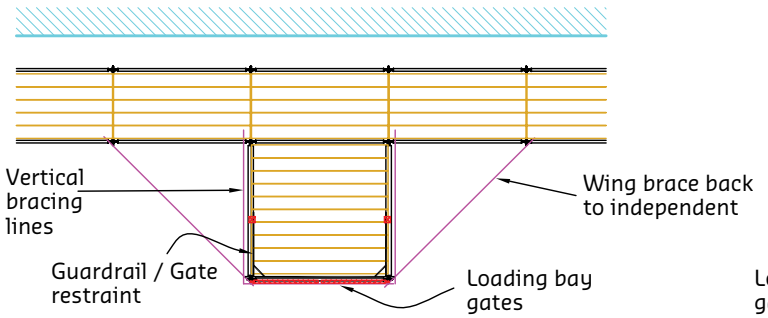

PLAN (Gates closed)

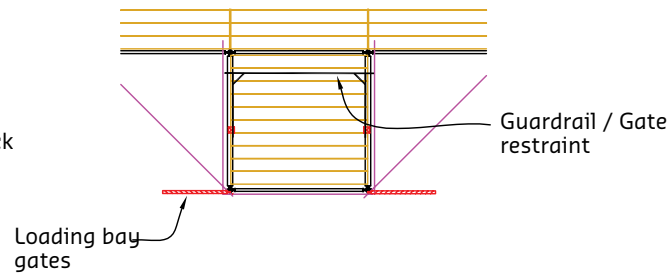

PLAN (Gates open)

Typical Arrangement Side of Loading Bay

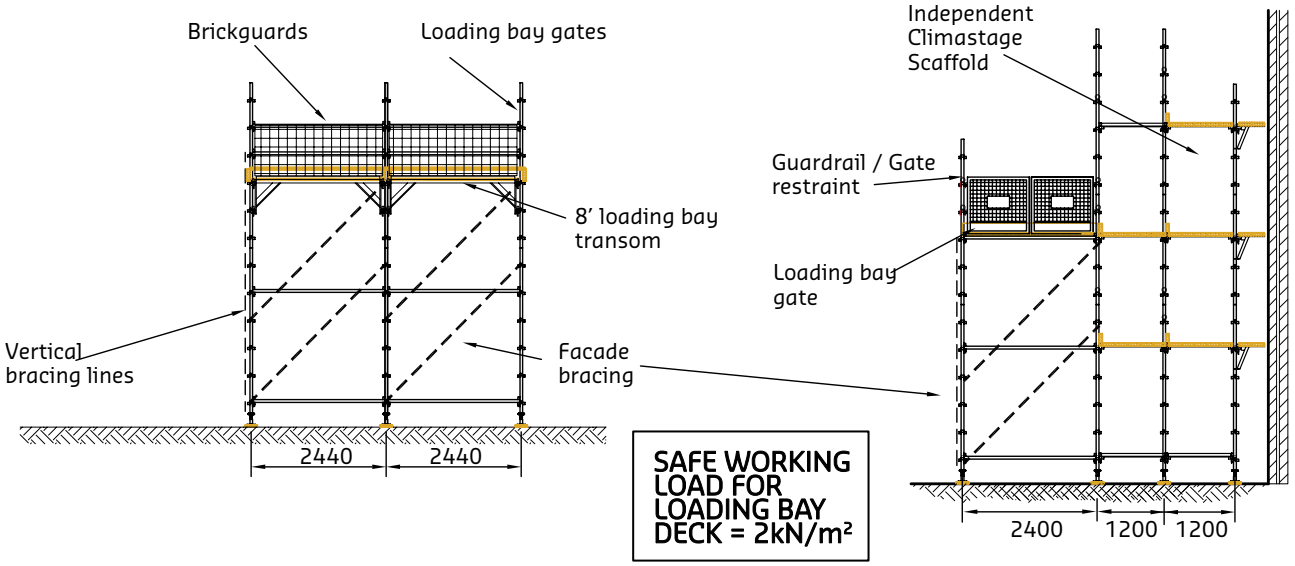

SAFE WORKING LOAD FOR LOADING BAY DECK = 2kN/m²

FRONT ELEVATION

SIDE ELEVATION

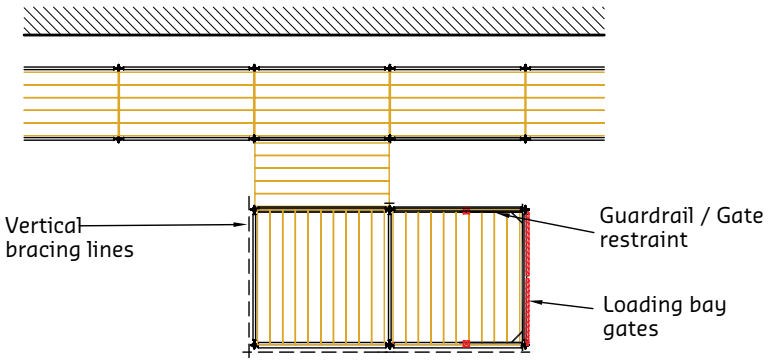

PLAN (Gates closed)

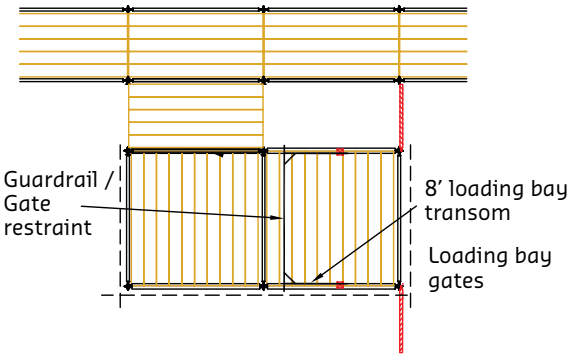

PLAN (Gates open)

Ladder Tower

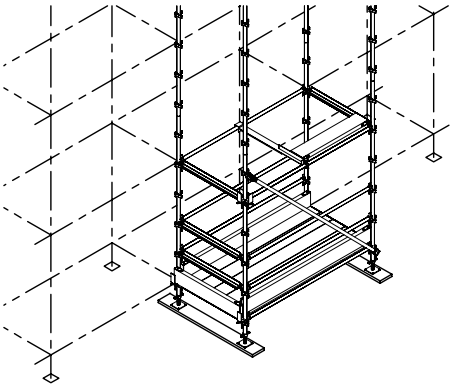

1. Where ladder access towers are required, consideration should be given to their location within the scaffold. The following is recommended:

   (a) Whenever possible a separate ladder tower should be constructed eaving the working platform on the scaffold intact.

   (b) When (a) is not possible the ladder tower should be positioned on the end run of the scaffold, keeping disruption of the working scaffold to a minimum.

   (c) Only when (a) and (b) are not practicable should consideration be given to positioning the ladder tower on the general run of the scaffold.

2. Construction of the ladder framework should be in accordance with the erection guide in section 2.

3. Suggested erection sequence of the ladder tower that follows is based on a ladder tower being 1.2m x 2.4m on plan built in 2m lifts and using a 3m ladder to give access to each lift.

   (a) Erect the basic framework of the ladder tower complete with fully decked bottom lift at the lowest transom level.

   (b) Fit a ladder access transom centrally across the ledgers 2m above the boarded lift, with the half coupler attached to the outside ledger of the ladder tower. Leave the half coupler loose enough to adjust the position of the transom.

   (c) Place a Steelstage batten between the outside transom and the ladder transom and ensure it is fully located by pushing ladder access transom up against it. Check it is square and tighten the half coupler

   (d) Working from below, fit the second 1.2m and the three 2.4m Steelstage into the bay.

   (e) Using the 3m ladder as access, complete the 2m lift as shown.

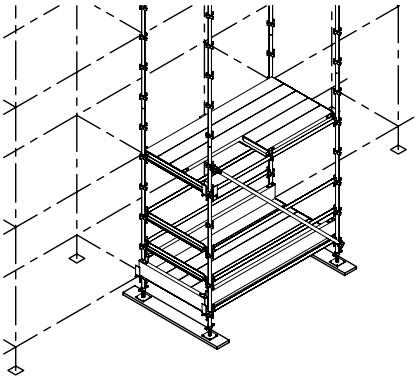

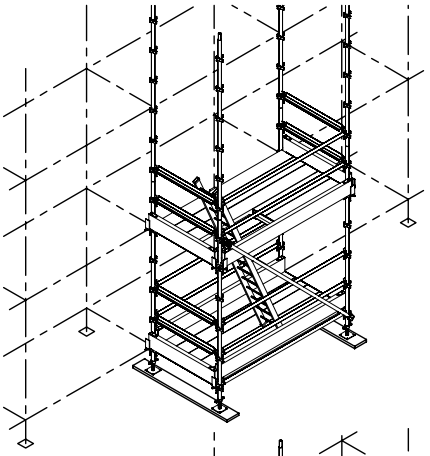

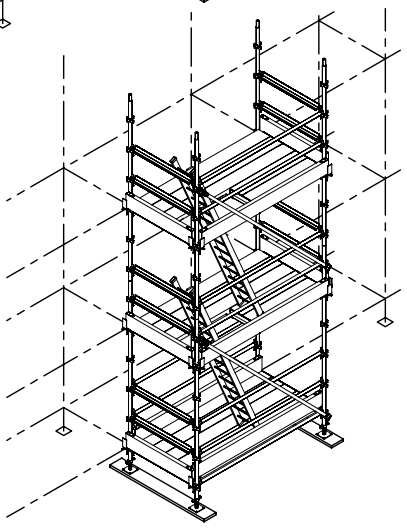

4 Where ladder access is erected within the main run

   (refer to 1(c)), fit a guardrail at the main guardrail height only on the approaches to the ladder access. A warning notice should be fitted to this guardrail stating that there is an opening in the platform.

5 Repeat the erection sequence 3 (and 4) above as required by the progress of the main scaffold.

6 To dismantle the ladder tower reverse the above sequence having first checked that the scaffold is still in the correctly erected condition.

Section 4:

Safe Height Tables

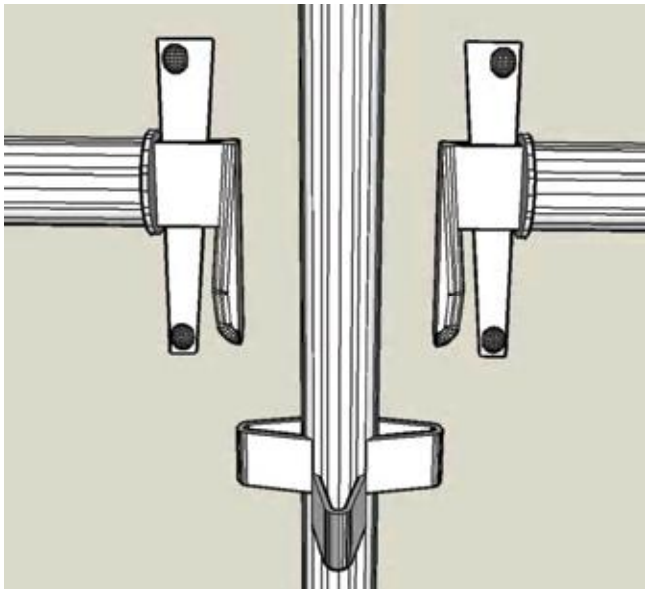

Use of Safe Height Tables

The value of 'S' is derived from the following:

$$S = V_b \times T \times \left(1 + \frac{A}{1000}\right)$$

For further explanation see the latest edition of NASC publication TG20.

Load Tables
The safe height tables in section 4 of this manual are tabulated into various categories to suit the loading conditions.

Designations of the different types are as follows:

3-5-2
Means **3** = Load class

5 = The number of boards between the standards **2** = The number of cantilevered boards
s = short bays 1.83m (6'-0") long

Lightly load inside boards = 0.75kN/m^2
Fully loaded is the same loading as the main deck.

The safe height tables in section 4. Because the nature of the system, the Climastage is very weak when there is no boarding or plan bracing. Consequently safe heights for part boarded scaffolds with no plan bracing are only offered in the unclad condition. The part boarded condition is offered with plan bracing for unclad, debris netted and sheeted scaffolds. The fully boarded condition is offered for the unclad, debris netted and sheeted scaffolds also. In section 4 the shaded areas relate to the limitations on the 3 boarded brackets which are lightly loaded. Fully loaded 3 boarded brackets are not permitted.

The tables apply under the following conditions:

- Foot ties are installed to all scaffolds
- 2m maximum lifts
- Maximum height of 30m
- Ties should be continuous members from the tie point on the façade to the outside standard and for preference connect to the standards using right angled couplers.
- Alternative standards are tied at the top lift.
- Tie forces have been calculated for wind suction only. Under wind pressure conditions it has been assumed that the scaffolding will move into bearing with the face of the building to provide extra points of support. To achieve this, it is recommended that the scaffolds are erected with a gap of no more than 50mm to the façade.
- Façade bracing should be fitted in two bays every six bays. In the case of the tie patterns 9a and 9b the two bays of façade bracing should span across the tied standards.
- It has been assumed that the sheeting and debris netting spans from ledger to middle guard rail.
- A further set of tables in section 4 has been compiled. Only one set of figures are given for ties at alternative lifts and for ties at every lift. The tabulated values are the smaller values given in the previous tables. Inthese tables the tie forces for the safe height are given also.

Part Boarded, Unbraced, Unclad. 30m max

Designation	S	Lightly loaded inside boards								Fully loaded inside boards							
		Country				Town				Country				Town			
		Ties at alternate lifts		Ties at every lift		Ties at alternate lifts		Ties at every lift		Ties at alternate lifts		Ties at every lift		Ties at alternate lifts		Ties at every lift	
		9a	9b	9d	9e	9a	9b	9d	9e	9a	9b	9d	9e	9a	9b	9d	9e
1 - 3 - 0	20	8	30	8	28	8	30	8	28	8	30	8	28	8	30	8	28
	24	7	30	7	28	8	30	8	28	7	30	7	28	8	30	8	28
	28	-	30	-	28	7	30	7	28	-	30	-	28	7	30	7	28
	32	-	30	-	28	-	30	-	28	-	30	-	28	-	30	-	28
	36	-	27	-	26	-	30	-	28	-	27	-	28	-	30	-	28
	40	-	24	-	23	-	30	-	28	-	24	-	28	-	30	-	28
3 - 5 - 0	20	-	6	-	-	-	6	-	-	-	6	-	-	-	6	-	-
	24	-	6	-	-	-	6	-	-	-	6	-	-	-	6	-	-
	28	-	6	-	-	-	6	-	-	-	6	-	-	-	6	-	-
	32	-	6	-	-	-	6	-	-	-	6	-	-	-	6	-	-
	36	-	6	-	-	-	6	-	-	-	6	-	-	-	6	-	-
	40	-	6	-	-	-	6	-	-	-	6	-	-	-	-	-	-
3 - 5 - 1	20	-	-	-	-	-	-	-	-	-	-	-	-	-	-	-	-
	24	-	-	-	-	-	-	-	-	-	-	-	-	-	-	-	-
	28	-	-	-	-	-	-	-	-	-	-	-	-	-	-	-	-
	32	-	-	-	-	-	-	-	-	-	-	-	-	-	-	-	-
	36	-	-	-	-	-	-	-	-	-	-	-	-	-	-	-	-
	40	-	-	-	-	-	-	-	-	-	-	-	-	-	-	-	-
3 - 5 - 2	20	-	-	-	-	-	-	-	-	-	-	-	-	-	-	-	-
	24	-	-	-	-	-	-	-	-	-	-	-	-	-	-	-	-
	28	-	-	-	-	-	-	-	-	-	-	-	-	-	-	-	-
	32	-	-	-	-	-	-	-	-	-	-	-	-	-	-	-	-
	36	-	-	-	-	-	-	-	-	-	-	-	-	-	-	-	-
	40	-	-	-	-	-	-	-	-	-	-	-	-	-	-	-	-
3 - 5 - 3	20	-	-	-	-	-	-	-	-	-	-	-	-	-	-	-	-
	24	-	-	-	-	-	-	-	-	-	-	-	-	-	-	-	-
	28	-	-	-	-	-	-	-	-	-	-	-	-	-	-	-	-
	32	-	-	-	-	-	-	-	-	-	-	-	-	-	-	-	-
	36	-	-	-	-	-	-	-	-	-	-	-	-	-	-	-	-
	40	-	-	-	-	-	-	-	-	-	-	-	-	-	-	-	-
3 - 5 - 0 S	20	-	20	-	15	-	20	-	15	-	20	-	15	-	20	-	15
	24	-	20	-	15	-	20	-	15	-	20	-	15	-	20	-	15
	28	-	20	-	15	-	20	-	15	-	20	-	15	-	20	-	15
	32	-	20	-	15	-	20	-	15	-	20	-	15	-	20	-	15
	36	-	20	-	15	-	20	-	15	-	20	-	15	-	20	-	15
	40	-	20	-	15	-	20	-	15	-	20	-	15	-	20	-	15
3 - 5 - 1 S	20	-	15	-	11	-	15	-	11	-	12	-	8	-	12	-	8
	24	-	15	-	11	-	11	-	11	-	12	-	8	-	12	-	8
	28	-	15	-	11	-	15	-	11	-	12	-	8	-	12	-	8
	32	-	15	-	11	-	15	-	11	-	12	-	8	-	12	-	8
	36	-	15	-	11	-	15	-	11	-	12	-	8	-	12	-	8
	40	-	15	-	11	-	15	-	11	-	12	-	8	-	12	-	8
3 - 5 - 2 S	20	-	12	-	8	-	12	-	8	-	7	-	-	-	7	-	-
	24	-	12	-	8	-	12	-	8	-	7	-	-	-	7	-	-
	28	-	12	-	8	-	12	-	8	-	7	-	-	-	7	-	-
	32	-	12	-	8	-	12	-	8	-	7	-	-	-	7	-	-
	36	-	12	-	8	-	12	-	8	-	7	-	-	-	7	-	-
	40	-	12	-	8	-	12	-	8	-	7	-	-	-	7	-	-
3 - 5 - 3 S	20	-	9	-	6	-	9	-	6	-	-	-	-	-	-	-	-
	24	-	9	-	6	-	9	-	6	-	-	-	-	-	-	-	-
	28	-	9	-	6	-	9	-	6	-	-	-	-	-	-	-	-
	32	-	9	-	6	-	9	-	6	-	-	-	-	-	-	-	-
	36	-	9	-	6	-	9	-	6	-	-	-	-	-	-	-	-
	40	-	9	-	6	-	9	-	6	-	-	-	-	-	-	-	-
4 - 5 - 0	20	-	-	-	-	-	-	-	-	-	-	-	-	-	-	-	-
	24	-	-	-	-	-	-	-	-	-	-	-	-	-	-	-	-
	28	-	-	-	-	-	-	-	-	-	-	-	-	-	-	-	-
	32	-	-	-	-	-	-	-	-	-	-	-	-	-	-	-	-
	36	-	-	-	-	-	-	-	-	-	-	-	-	-	-	-	-
	40	-	-	-	-	-	-	-	-	-	-	-	-	-	-	-	-
4 - 5 - 1	20	-	-	-	-	-	-	-	-	-	-	-	-	-	-	-	-
	24	-	-	-	-	-	-	-	-	-	-	-	-	-	-	-	-
	28	-	-	-	-	-	-	-	-	-	-	-	-	-	-	-	-
	32	-	-	-	-	-	-	-	-	-	-	-	-	-	-	-	-
	36	-	-	-	-	-	-	-	-	-	-	-	-	-	-	-	-
	40	-	-	-	-	-	-	-	-	-	-	-	-	-	-	-	-
4 - 5 - 2	20	-	-	-	-	-	-	-	-	-	-	-	-	-	-	-	-
	24	-	-	-	-	-	-	-	-	-	-	-	-	-	-	-	-
	28	-	-	-	-	-	-	-	-	-	-	-	-	-	-	-	-
	32	-	-	-	-	-	-	-	-	-	-	-	-	-	-	-	-
	36	-	-	-	-	-	-	-	-	-	-	-	-	-	-	-	-
	40	-	-	-	-	-	-	-	-	-	-	-	-	-	-	-	-
4 - 5 - 3	20	-	-	-	-	-	-	-	-	-	-	-	-	-	-	-	-
	24	-	-	-	-	-	-	-	-	-	-	-	-	-	-	-	-
	28	-	-	-	-	-	-	-	-	-	-	-	-	-	-	-	-
	32	-	-	-	-	-	-	-	-	-	-	-	-	-	-	-	-
	36	-	-	-	-	-	-	-	-	-	-	-	-	-	-	-	-
	40	-	-	-	-	-	-	-	-	-	-	-	-	-	-	-	-

Part Boarded, Braced, Unclad. 30m max

Designation	S	Lightly loaded inside boards								Fully loaded inside boards							
		Country				Town				Country				Town			
		Ties at alternate lifts		Ties at every lift		Ties at alternate lifts		Ties at every lift		Ties at alternate lifts		Ties at every lift		Ties at alternate lifts		Ties at every lift	
		9a	9b	9d	9e	9a	9b	9d	9e	9a	9b	9d	9e	9a	9b	9d	9e
1 - 3 - 0	20	30	30	30	30	30	30	30	30	30	30	30	30	30	30	30	30
	24	30	30	30	30	30	30	30	30	30	30	30	30	30	30	30	30
	28	30	30	30	30	30	30	30	30	30	30	30	30	30	30	30	30
	32	30	30	30	30	30	30	30	30	30	30	30	30	30	30	30	30
	36	29	25	30	30	30	24	30	30	29	25	30	30	30	24	30	30
	40	16	10	24	14	18	12	24	16	16	10	24	14	18	14	24	16
3 - 5 - 0	20	22	21	30	27	22	21	30	27	22	21	30	27	22	21	30	27
	24	22	21	30	27	22	21	30	27	22	21	30	27	22	21	30	27
	28	22	21	30	27	22	21	30	27	22	21	30	27	22	21	30	27
	32	22	21	30	27	22	21	30	27	22	21	30	27	22	21	30	27
	36	22	14	30	20	22	16	30	22	22	14	30	22	22	16	30	22
	40	10	8	16	10	14	10	18	12	10	8	16	10	14	10	18	12
3 - 5 - 1	20	17	16	25	21	17	16	25	21	15	14	22	19	15	14	22	19
	24	17	16	25	21	17	16	25	21	15	14	22	19	15	14	22	19
	28	17	16	25	21	17	16	25	21	15	14	22	19	15	14	22	19
	32	17	16	25	21	17	16	25	21	15	14	22	19	15	14	22	19
	36	17	12	24	18	17	16	25	20	15	12	22	16	15	14	22	19
	40	8	6	14	8	12	10	16	12	8	6	12	8	12	10	16	12
3 - 5 - 2	20	14	13	22	18	14	13	22	18	10	9	17	14	10	9	17	14
	24	14	13	22	18	14	13	22	18	10	9	17	14	10	9	17	14
	28	14	13	22	18	14	13	22	18	10	9	17	14	10	9	17	14
	32	14	13	22	18	14	13	22	18	10	9	17	14	10	9	17	14
	36	14	10	22	16	14	13	22	18	10	9	17	14	10	9	17	14
	40	8	6	12	8	12	8	16	10	8	6	12	8	10	9	14	10
3 - 5 - 3	20	-	-	-	-	-	-	-	-	-	-	-	-	-	-	-	-
	24	-	-	-	-	-	-	-	-	-	-	-	-	-	-	-	-
	28	-	-	-	-	-	-	-	-	-	-	-	-	-	-	-	-
	32	-	-	-	-	-	-	-	-	-	-	-	-	-	-	-	-
	36	-	-	-	-	-	-	-	-	-	-	-	-	-	-	-	-
	40	-	-	-	-	-	-	-	-	-	-	-	-	-	-	-	-
3 - 5 - 0 S	20	30	30	30	30	30	30	30	30	30	30	30	30	30	30	30	30
	24	30	30	30	30	30	30	30	30	30	30	30	30	30	30	30	30
	28	30	30	30	30	30	30	30	30	30	30	30	30	30	30	30	30
	32	30	30	30	30	30	30	30	30	30	30	30	30	30	30	30	30
	36	30	30	30	30	30	30	30	30	30	30	30	30	30	30	30	30
	40	30	27	30	30	30	30	30	30	30	27	30	30	30	30	30	30
3 - 5 - 1 S	20	29	28	30	30	29	28	30	30	27	26	30	30	27	26	30	30
	24	29	28	30	30	29	28	30	30	27	26	30	30	27	26	30	30
	28	29	28	30	30	29	28	30	30	27	26	30	30	27	26	30	30
	32	29	28	30	30	29	28	30	30	27	26	30	30	27	26	30	30
	36	29	28	30	30	29	28	30	30	27	26	30	30	27	26	30	30
	40	26	23	30	30	29	28	30	30	25	23	30	30	27	26	30	30
3 - 5 - 2 S	20	26	25	30	30	26	25	30	30	22	21	30	30	22	21	30	30
	24	26	25	30	30	26	25	30	30	22	21	30	30	22	21	30	30
	28	26	25	30	30	26	25	30	30	22	21	30	30	22	21	30	30
	32	26	25	30	30	26	25	30	30	22	21	30	30	22	21	30	30
	36	26	25	30	30	26	25	30	30	22	21	30	30	22	21	30	30
	40	24	21	30	30	26	25	30	30	22	21	30	30	22	21	30	30
3 - 5 - 3 S	20	23	22	30	30	23	22	30	30	-	-	-	-	-	-	-	-
	24	23	22	30	30	23	22	30	30	-	-	-	-	-	-	-	-
	28	23	22	30	30	23	22	30	30	-	-	-	-	-	-	-	-
	32	23	22	30	30	23	22	30	30	-	-	-	-	-	-	-	-
	36	23	22	30	30	23	22	30	30	-	-	-	-	-	-	-	-
	40	22	19	30	30	23	22	30	30	-	-	-	-	-	-	-	-
4 - 5 - 0	20	11	10	20	16	11	10	20	16	11	10	20	16	11	10	20	16
	24	11	10	20	16	11	10	20	16	11	10	20	16	11	10	20	16
	28	11	10	20	16	11	10	20	16	11	10	20	16	11	10	20	16
	32	11	10	20	16	11	10	20	16	11	10	20	16	11	10	20	16
	36	11	8	20	12	11	10	20	16	11	8	20	12	11	10	20	14
	40	6	4	10	6	10	8	12	16	6	4	10	6	10	8	12	10
4 - 5 - 1	20	7	6	15	12	7	6	15	12	-	-	11	7	-	-	11	7
	24	7	6	15	12	7	6	15	12	-	-	11	7	-	-	11	7
	28	7	6	15	12	7	6	15	12	-	-	11	7	-	-	11	7
	32	7	6	15	12	7	6	15	12	-	-	11	7	-	-	11	7
	36	7	6	15	10	7	6	15	12	-	-	11	7	-	-	11	7
	40	6	-	8	6	7	6	12	12	-	-	8	5	-	-	11	7
4 - 5 - 2	20	5	4	13	9	5	4	13	9	-	-	-	-	-	-	-	-
	24	5	4	13	9	5	4	13	9	-	-	-	-	-	-	-	-
	28	5	4	13	9	5	4	13	9	-	-	-	-	-	-	-	-
	32	5	4	13	9	5	4	13	9	-	-	-	-	-	-	-	-
	36	5	4	13	9	5	4	13	9	-	-	-	-	-	-	-	-
	40	5	-	8	5	5	4	10	8	-	-	-	-	-	-	-	-
4 - 5 - 3	20	-	-	-	-	-	-	-	-	-	-	-	-	-	-	-	-
	24	-	-	-	-	-	-	-	-	-	-	-	-	-	-	-	-
	28	-	-	-	-	-	-	-	-	-	-	-	-	-	-	-	-
	32	-	-	-	-	-	-	-	-	-	-	-	-	-	-	-	-
	36	-	-	-	-	-	-	-	-	-	-	-	-	-	-	-	-
	40	-	-	-	-	-	-	-	-	-	-	-	-	-	-	-	-

Part Boarded, Braced, Debris Netted. 30m max

Designation	S	Lightly loaded inside boards								Fully loaded inside boards							
		Country				Town				Country				Town			
		Ties at alternate lifts		Ties at every lift		Ties at alternate lifts		Ties at every lift		Ties at alternate lifts		Ties at every lift		Ties at alternate lifts		Ties at every lift	
		9a	9b	9d	9e	9a	9b	9d	9e	9a	9b	9d	9e	9a	9b	9d	9e
1 - 3 - 0	20	30	26	30	28	30	26	30	30	30	26	30	30	30	26	30	30
	24	30	16	30	28	30	18	30	18	30	16	30	18	30	18	30	20
	28	27	6	12	28	30	10	16	10	27	6	12	6	30	10	30	10
	32	10	-	6	28	14	6	8	6	10	-	6	-	14	6	30	6
	36	4	-	-	26	8	6	6	6	6	-	-	-	8	6	16	6
	40	-	-	-	23	6	-	6	-	30	-	-	-	6	-	10	-
3 - 5 - 0	20	15	6	18	-	15	6	18	10	15	6	18	10	15	6	27	10
	24	15	6	18	-	15	6	18	10	15	6	18	10	15	6	27	10
	28	15	-	10	-	15	6	12	8	15	-	10	5	15	6	27	8
	32	8	-	4	-	10	6	8	6	8	-	4	-	10	6	24	6
	36	-	-	-	-	8	-	6	-	-	-	-	-	8	6	12	-
	40	-	-	-	-	6	-	4	-	-	-	-	-	6	-	8	-
3 - 5 - 1	20	11	-	13	-	11	-	13	6	9	-	11	4	9	-	19	4
	24	11	-	13	-	11	-	13	6	9	-	11	4	9	-	19	4
	28	11	-	8	-	11	-	12	6	9	-	8	-	9	-	19	4
	32	6	-	-	-	10	-	8	6	6	-	-	-	9	-	19	4
	36	-	-	-	-	6	-	6	-	-	-	-	-	6	-	12	-
	40	-	-	-	-	6	-	-	-	-	-	-	-	6	-	8	-
3 - 5 - 2	20	9	-	11	-	9	-	11	4	-	-	6	-	-	-	14	-
	24	9	-	11	-	9	-	11	4	-	-	6	-	-	-	14	-
	28	9	-	8	-	9	-	11	4	-	-	6	-	-	-	14	-
	32	9	-	-	-	9	-	6	4	-	-	-	-	-	-	14	-
	36	-	-	-	-	6	-	6	-	-	-	-	-	-	-	10	-
	40	-	-	-	-	6	-	-	-	-	-	-	-	-	-	8	-
3 - 5 - 3	20	-	-	-	-	-	-	-	-	-	-	-	-	-	-	-	-
	24	-	-	-	-	-	-	-	-	-	-	-	-	-	-	-	-
	28	-	-	-	-	-	-	-	-	-	-	-	-	-	-	-	-
	32	-	-	-	-	-	-	-	-	-	-	-	-	-	-	-	-
	36	-	-	-	-	-	-	-	-	-	-	-	-	-	-	-	-
	40	-	-	-	-	-	-	-	-	-	-	-	-	-	-	-	-
3 - 5 - 0 S	20	27	23	30	30	27	23	30	30	27	23	30	30	27	23	30	30
	24	27	23	30	30	27	23	30	30	27	23	30	30	27	23	30	30
	28	27	16	30	30	27	18	30	28	27	16	30	30	27	18	14	28
	32	16	6	30	10	18	10	30	12	16	6	30	10	18	10	8	12
	36	6	-	12	6	10	6	14	8	6	-	12	6	10	6	6	8
	40	-	-	6	-	8	6	10	6	-	-	6	-	8	6	6	6
3 - 5 - 1 S	20	22	18	30	30	22	18	30	30	20	16	30	30	20	16	24	30
	24	22	18	30	30	22	18	30	30	20	16	30	30	20	16	24	30
	28	22	14	30	26	22	18	30	26	20	14	30	26	20	16	14	26
	32	14	6	29	8	16	10	28	12	14	6	29	8	16	10	8	12
	36	6	-	10	5	10	6	14	8	6	-	10	5	10	6	6	8
	40	-	-	6	-	6	6	8	6	-	-	6	-	6	6	6	6
3 - 5 - 2 S	20	19	16	30	29	19	16	30	29	16	12	29	25	16	12	20	25
	24	19	16	30	29	19	16	30	29	16	12	29	25	16	12	20	25
	28	19	12	30	24	19	16	30	24	16	12	29	24	14	12	12	24
	32	12	4	27	8	16	8	26	12	12	6	26	8	14	8	8	12
	36	6	-	10	4	10	6	12	8	6	-	10	-	8	6	6	8
	40	-	-	6	-	6	6	8	6	-	-	6	-	6	6	6	6
3 - 5 - 3 S	20	17	13	29	26	17	13	29	26	-	-	-	-	-	-	-	-
	24	17	13	29	26	17	13	29	26	-	-	-	-	-	-	-	-
	28	17	12	29	22	17	13	29	24	-	-	-	-	-	-	-	-
	32	12	6	25	8	14	8	24	12	-	-	-	-	-	-	-	-
	36	6	-	10	-	8	6	12	8	-	-	-	-	-	-	-	-
	40	-	-	6	-	6	6	8	6	-	-	-	-	-	-	-	-
4 - 5 - 0	20	5	-	7	-	5	-	7	-	5	-	7	-	5	-	16	-
	24	5	-	7	-	5	-	7	-	5	-	7	-	5	-	16	-
	28	5	-	7	-	5	-	7	-	5	-	7	-	5	-	16	-
	32	4	-	-	-	5	-	7	-	4	-	-	-	5	-	16	-
	36	-	-	-	-	5	-	6	-	-	-	-	-	5	-	10	-
	40	-	-	-	-	5	-	-	-	-	-	-	-	5	-	6	-
4 - 5 - 1	20	-	-	4	-	-	-	4	-	-	-	-	-	-	-	8	-
	24	-	-	4	-	-	-	4	-	-	-	-	-	-	-	8	-
	28	-	-	4	-	-	-	4	-	-	-	-	-	-	-	8	-
	32	-	-	-	-	-	-	4	-	-	-	-	-	-	-	8	-
	36	-	-	-	-	-	-	4	-	-	-	-	-	-	-	8	-
	40	-	-	-	-	-	-	-	-	-	-	-	-	-	-	6	-
4 - 5 - 2	20	-	-	-	-	-	-	-	-	-	-	-	-	-	-	-	-
	24	-	-	-	-	-	-	-	-	-	-	-	-	-	-	-	-
	28	-	-	-	-	-	-	-	-	-	-	-	-	-	-	-	-
	32	-	-	-	-	-	-	-	-	-	-	-	-	-	-	-	-
	36	-	-	-	-	-	-	-	-	-	-	-	-	-	-	-	-
	40	-	-	-	-	-	-	-	-	-	-	-	-	-	-	-	-
4 - 5 - 3	20	-	-	-	-	-	-	-	-	-	-	-	-	-	-	-	-
	24	-	-	-	-	-	-	-	-	-	-	-	-	-	-	-	-
	28	-	-	-	-	-	-	-	-	-	-	-	-	-	-	-	-
	32	-	-	-	-	-	-	-	-	-	-	-	-	-	-	-	-
	36	-	-	-	-	-	-	-	-	-	-	-	-	-	-	-	-
	40	-	-	-	-	-	-	-	-	-	-	-	-	-	-	-	-

Part Boarded, Braced, Sheeted. 30m max

Designation	S	Lightly loaded inside boards								Fully loaded inside boards							
		Country				Town				Country				Town			
		Ties at alternate lifts		Ties at every lift		Ties at alternate lifts		Ties at every lift		Ties at alternate lifts		Ties at every lift		Ties at alternate lifts		Ties at every lift	
		9a	9b	9d	9e	9a	9b	9d	9e	9a	9b	9d	9e	9a	9b	9d	9e
1 - 3 - 0	20	19	-	12	-	19	-	15	-	19	-	12	-	19	-	15	-
	24	8	-	-	-	10	-	8	-	8	-	-	-	10	-	8	-
	28	-	-	-	-	6	-	6	-	-	-	-	-	6	-	6	-
	32	-	-	-	-	6	-	-	-	-	-	-	-	6	-	-	-
	36	-	-	-	-	-	-	-	-	-	-	-	-	-	-	-	-
	40	-	-	-	-	-	-	-	-	-	-	-	-	-	-	-	-
3 - 5 - 0	20	-	-	-	-	-	-	-	-	-	-	-	-	-	-	-	-
	24	-	-	-	-	-	-	-	-	-	-	-	-	-	-	-	-
	28	-	-	-	-	-	-	-	-	-	-	-	-	-	-	-	-
	32	-	-	-	-	-	-	-	-	-	-	-	-	-	-	-	-
	36	-	-	-	-	-	-	-	-	-	-	-	-	-	-	-	-
	40	-	-	-	-	-	-	-	-	-	-	-	-	-	-	-	-
3 - 5 - 1	20	-	-	-	-	-	-	-	-	-	-	-	-	-	-	-	-
	24	-	-	-	-	-	-	-	-	-	-	-	-	-	-	-	-
	28	-	-	-	-	-	-	-	-	-	-	-	-	-	-	-	-
	32	-	-	-	-	-	-	-	-	-	-	-	-	-	-	-	-
	36	-	-	-	-	-	-	-	-	-	-	-	-	-	-	-	-
	40	-	-	-	-	-	-	-	-	-	-	-	-	-	-	-	-
3 - 5 - 2	20	-	-	-	-	-	-	-	-	-	-	-	-	-	-	-	-
	24	-	-	-	-	-	-	-	-	-	-	-	-	-	-	-	-
	28	-	-	-	-	-	-	-	-	-	-	-	-	-	-	-	-
	32	-	-	-	-	-	-	-	-	-	-	-	-	-	-	-	-
	36	-	-	-	-	-	-	-	-	-	-	-	-	-	-	-	-
	40	-	-	-	-	-	-	-	-	-	-	-	-	-	-	-	-
3 - 5 - 3	20	-	-	-	-	-	-	-	-	-	-	-	-	-	-	-	-
	24	-	-	-	-	-	-	-	-	-	-	-	-	-	-	-	-
	28	-	-	-	-	-	-	-	-	-	-	-	-	-	-	-	-
	32	-	-	-	-	-	-	-	-	-	-	-	-	-	-	-	-
	36	-	-	-	-	-	-	-	-	-	-	-	-	-	-	-	-
	40	-	-	-	-	-	-	-	-	-	-	-	-	-	-	-	-
3 - 5 - 0 S	20	13	4	27	16	13	4	27	16	13	4	27	16	13	4	27	16
	24	10	4	18	6	13	4	20	10	10	4	18	6	13	4	20	10
	28	-	-	6	-	8	4	10	6	-	-	6	-	8	4	10	6
	32	-	-	-	-	6	-	6	6	-	-	-	-	6	-	6	6
	36	-	-	-	-	-	-	6	-	-	-	-	-	-	-	6	-
	40	-	-	-	-	-	-	-	-	-	-	-	-	-	-	-	-
3 - 5 - 1 S	20	9	-	21	12	9	-	21	12	7	-	19	10	7	-	19	10
	24	9	-	16	6	9	-	20	10	7	-	16	6	7	-	19	10
	28	-	-	6	-	8	-	10	6	-	-	6	-	7	-	10	6
	32	-	-	-	-	6	-	6	5	-	-	-	-	6	-	6	5
	36	-	-	-	-	-	-	6	-	-	-	-	-	-	-	6	-
	40	-	-	-	-	-	-	-	-	-	-	-	-	-	-	-	-
3 - 5 - 2 S	20	7	-	19	10	7	-	19	10	-	-	15	6	-	-	15	6
	24	7	-	16	6	7	-	19	10	-	-	15	6	-	-	15	6
	28	-	-	6	-	6	-	8	6	-	-	6	-	-	-	8	6
	32	-	-	-	-	6	-	6	-	-	-	-	-	-	-	6	-
	36	-	-	-	-	-	-	6	8	-	-	-	-	-	-	6	-
	40	-	-	-	-	-	-	-	-	-	-	-	-	-	-	-	-
3 - 5 - 3 S	20	5	-	16	8	5	-	16	8	-	-	-	-	-	-	-	-
	24	5	-	14	6	5	-	16	8	-	-	-	-	-	-	-	-
	28	-	-	6	-	5	-	8	6	-	-	-	-	-	-	-	-
	32	-	-	-	-	6	-	6	-	-	-	-	-	-	-	-	-
	36	-	-	-	-	-	-	6	-	-	-	-	-	-	-	-	-
	40	-	-	-	-	-	-	-	-	-	-	-	-	-	-	-	-
4 - 5 - 0	20	-	-	-	-	-	-	-	-	-	-	-	-	-	-	-	-
	24	-	-	-	-	-	-	-	-	-	-	-	-	-	-	-	-
	28	-	-	-	-	-	-	-	-	-	-	-	-	-	-	-	-
	32	-	-	-	-	-	-	-	-	-	-	-	-	-	-	-	-
	36	-	-	-	-	-	-	-	-	-	-	-	-	-	-	-	-
	40	-	-	-	-	-	-	-	-	-	-	-	-	-	-	-	-
4 - 5 - 1	20	-	-	-	-	-	-	-	-	-	-	-	-	-	-	-	-
	24	-	-	-	-	-	-	-	-	-	-	-	-	-	-	-	-
	28	-	-	-	-	-	-	-	-	-	-	-	-	-	-	-	-
	32	-	-	-	-	-	-	-	-	-	-	-	-	-	-	-	-
	36	-	-	-	-	-	-	-	-	-	-	-	-	-	-	-	-
	40	-	-	-	-	-	-	-	-	-	-	-	-	-	-	-	-
4 - 5 - 2	20	-	-	-	-	-	-	-	-	-	-	-	-	-	-	-	-
	24	-	-	-	-	-	-	-	-	-	-	-	-	-	-	-	-
	28	-	-	-	-	-	-	-	-	-	-	-	-	-	-	-	-
	32	-	-	-	-	-	-	-	-	-	-	-	-	-	-	-	-
	36	-	-	-	-	-	-	-	-	-	-	-	-	-	-	-	-
	40	-	-	-	-	-	-	-	-	-	-	-	-	-	-	-	-
4 - 5 - 3	20	-	-	-	-	-	-	-	-	-	-	-	-	-	-	-	-
	24	-	-	-	-	-	-	-	-	-	-	-	-	-	-	-	-
	28	-	-	-	-	-	-	-	-	-	-	-	-	-	-	-	-
	32	-	-	-	-	-	-	-	-	-	-	-	-	-	-	-	-
	36	-	-	-	-	-	-	-	-	-	-	-	-	-	-	-	-
	40	-	-	-	-	-	-	-	-	-	-	-	-	-	-	-	-

Fully Boarded, Unclad. 30m max

Designation	S	Lightly loaded inside boards								Fully loaded inside boards							
		Country				Town				Country				Town			
		Ties at alternate lifts		Ties at every lift		Ties at alternate lifts		Ties at every lift		Ties at alternate lifts		Ties at every lift		Ties at alternate lifts		Ties at every lift	
		9a	9b	9d	9e	9a	9b	9d	9e	9a	9b	9d	9e	9a	9b	9d	9e
1 - 3 - 0	20	25	24	30	27	25	24	30	27	25	24	30	27	25	24	30	27
	24	25	24	30	27	25	24	30	27	25	24	30	27	25	24	30	27
	28	23	22	28	25	25	24	30	27	23	22	28	25	25	24	30	27
	32	20	19	25	22	25	24	29	27	20	19	25	22	25	24	29	27
	36	17	16	21	18	23	22	27	25	17	16	21	18	23	22	27	25
	40	14	12	18	14	21	15	25	22	14	12	18	14	21	15	25	17
3 - 5 - 0	20	12	12	16	14	12	12	16	14	12	12	16	14	12	12	16	14
	24	12	12	16	14	12	12	16	14	12	12	16	14	12	12	16	14
	28	12	12	16	14	12	12	16	14	12	12	16	14	12	12	16	14
	32	12	12	16	14	12	12	16	14	12	12	16	14	12	12	16	14
	36	12	11	15	13	12	12	16	14	12	11	15	13	12	12	16	14
	40	9	8	15	10	12	12	16	14	9	8	12	10	12	12	16	13
3 - 5 - 1	20	10	9	13	12	10	9	13	12	9	8	12	11	9	8	12	11
	24	10	9	13	12	10	9	13	12	9	8	12	11	9	8	12	11
	28	10	9	13	12	10	9	13	12	9	8	12	11	9	8	12	11
	32	10	9	13	12	10	9	13	12	9	8	12	11	9	8	12	11
	36	10	9	13	11	10	9	13	12	9	8	12	11	9	8	12	11
	40	8	6	10	8	10	9	13	12	8	6	10	8	9	8	12	11
3 - 5 - 2	20	8	8	11	10	8	8	11	10	7	6	10	8	7	6	10	8
	24	8	8	11	10	8	8	11	10	7	6	10	8	7	6	10	8
	28	8	8	11	10	8	8	11	10	7	6	10	8	7	6	10	8
	32	8	8	11	10	8	8	11	10	7	6	10	8	7	6	10	8
	36	8	8	11	10	8	8	11	10	7	6	10	8	7	6	10	8
	40	7	6	9	7	8	8	11	10	7	5	9	7	7	6	10	8
3 - 5 - 3	20	-	-	-	-	-	-	-	-	-	-	-	-	-	-	-	-
	24	-	-	-	-	-	-	-	-	-	-	-	-	-	-	-	-
	28	-	-	-	-	-	-	-	-	-	-	-	-	-	-	-	-
	32	-	-	-	-	-	-	-	-	-	-	-	-	-	-	-	-
	36	-	-	-	-	-	-	-	-	-	-	-	-	-	-	-	-
	40	-	-	-	-	-	-	-	-	-	-	-	-	-	-	-	-
3 - 5 - 0 S	20	19	19	27	28	19	19	27	28	19	19	27	28	19	19	27	28
	24	19	19	27	28	19	19	27	28	19	19	27	28	19	19	27	28
	28	19	19	27	28	19	19	27	28	19	19	27	28	19	19	27	28
	32	19	19	27	28	19	19	27	28	19	19	27	28	19	19	27	28
	36	19	18	27	26	19	19	27	28	19	18	27	26	19	19	27	28
	40	17	15	24	23	19	19	27	28	17	15	24	23	19	19	27	28
3 - 5 - 1 S	20	16	16	23	23	16	16	23	23	15	15	22	22	15	15	22	22
	24	16	16	23	23	16	16	23	23	15	15	22	22	15	15	22	22
	28	16	16	23	23	16	16	23	23	15	15	22	22	15	15	22	22
	32	16	16	23	23	16	16	23	23	15	15	22	22	15	15	22	22
	36	16	16	23	22	16	16	23	23	15	15	22	22	15	15	22	22
	40	14	13	20	20	16	16	23	23	14	13	20	20	15	15	22	22
3 - 5 - 2 S	20	14	14	20	21	14	14	20	21	12	12	19	19	12	12	19	19
	24	14	14	20	21	14	14	20	21	12	12	19	19	12	12	19	19
	28	14	14	20	21	14	14	20	21	12	12	19	19	12	12	19	19
	32	14	14	20	21	14	14	20	21	12	12	19	19	12	12	19	19
	36	14	14	20	20	14	14	20	21	12	12	19	19	12	12	19	19
	40	13	12	18	18	14	14	20	21	12	12	18	18	12	12	19	19
3 - 5 - 3 S	20	12	12	18	18	12	12	18	18	-	-	-	-	-	-	-	-
	24	12	12	18	18	12	12	18	18	-	-	-	-	-	-	-	-
	28	12	12	18	18	12	12	18	18	-	-	-	-	-	-	-	-
	32	12	12	18	18	12	12	18	18	-	-	-	-	-	-	-	-
	36	12	12	18	18	12	12	18	18	-	-	-	-	-	-	-	-
	40	12	11	17	16	12	12	18	18	-	-	-	-	-	-	-	-
4 - 5 - 0	20	7	7	11	10	7	7	11	10	7	7	11	10	7	7	11	10
	24	7	7	11	10	7	7	11	10	7	7	11	10	7	7	11	10
	28	7	7	11	10	7	7	11	10	7	7	11	10	7	7	11	10
	32	7	7	11	10	7	7	11	10	7	7	11	10	7	7	11	10
	36	7	7	11	10	7	7	11	10	7	7	11	10	7	7	11	10
	40	6	4	9	6	7	7	11	10	6	4	9	6	7	-	11	10
4 - 5 - 1	20	6	5	9	8	6	5	9	8	-	-	7	6	-	-	7	6
	24	6	5	9	8	6	5	9	8	-	-	7	6	-	-	7	6
	28	6	5	9	8	6	5	9	8	-	-	7	6	-	-	7	6
	32	6	5	9	8	6	5	9	8	-	-	7	6	-	-	7	6
	36	6	5	9	8	6	5	9	8	-	-	7	6	-	-	7	6
	40	5	-	8	5	6	5	9	8	-	-	7	5	-	-	7	6
4 - 5 - 2	20	5	4	8	6	5	4	8	6	-	-	-	-	-	-	-	-
	24	5	4	8	6	5	4	8	6	-	-	-	-	-	-	-	-
	28	5	4	8	6	5	4	8	6	-	-	-	-	-	-	-	-
	32	5	4	8	6	5	4	8	6	-	-	-	-	-	-	-	-
	36	5	4	8	6	5	4	8	6	-	-	-	-	-	-	-	-
	40	5	-	7	5	5	4	8	6	-	-	-	-	-	-	-	-
4 - 5 - 3	20	-	-	-	-	-	-	-	-	-	-	-	-	-	-	-	-
	24	-	-	-	-	-	-	-	-	-	-	-	-	-	-	-	-
	28	-	-	-	-	-	-	-	-	-	-	-	-	-	-	-	-
	32	-	-	-	-	-	-	-	-	-	-	-	-	-	-	-	-
	36	-	-	-	-	-	-	-	-	-	-	-	-	-	-	-	-
	40	-	-	-	-	-	-	-	-	-	-	-	-	-	-	-	-

Fully Boarded, Debris netted. 30m max

Designation	S	Lightly loaded inside boards								Fully loaded inside boards							
		Country				Town				Country				Town			
		Ties at alternate lifts		Ties at every lift		Ties at alternate lifts		Ties at every lift		Ties at alternate lifts		Ties at every lift		Ties at alternate lifts		Ties at every lift	
		9a	9b	9d	9e	9a	9b	9d	9e	9a	9b	9d	9e	9a	9b	9d	9e
1 - 3 - 0	20	21	16	22	18	21	16	22	18	21	16	22	18	21	16	22	18
	24	21	14	21	15	21	16	22	18	21	14	21	15	21	16	2	18
	28	16	7	14	7	21	10	17	10	16	7	14	7	21	10	17	10
	32	12	-	7	-	15	7	10	7	12	-	7	-	15	7	10	7
	36	6	-	-	-	9	6	7	6	6	-	-	-	9	6	7	6
	40	-	-	-	-	7	-	6	-	-	-	-	-	7	-	6	-
3 - 5 - 0	20	9	5	10	7	9	5	10	7	9	5	10	7	9	5	10	7
	24	9	5	10	7	9	5	10	7	9	5	10	7	9	5	10	7
	28	9	4	10	5	9	5	10	7	9	4	10	5	9	5	10	7
	32	8	-	4	-	9	5	8	6	8	-	4	-	9	5	8	6
	36	-	-	-	-	8	-	6	-	-	-	-	-	8	-	6	-
	40	-	-	-	-	6	-	5	-	-	-	-	-	6	-	5	-
3 - 5 - 1	20	7	4	8	5	7	4	8	5	6	-	7	4	6	-	7	4
	24	7	4	8	5	7	4	8	5	6	-	7	4	6	-	7	4
	28	7	-	8	4	7	4	8	5	6	-	7	-	6	-	7	4
	32	6	-	-	-	7	4	8	5	6	-	-	-	6	-	7	4
	36	-	-	-	-	7	-	6	-	-	-	-	-	6	-	6	-
	40	-	-	-	-	7	-	-	-	-	-	-	-	6	-	-	-
3 - 5 - 2	20	6	-	7	4	6	-	7	4	4	-	5	-	4	-	5	-
	24	6	-	7	4	6	-	7	4	4	-	5	-	4	-	5	-
	28	6	-	7	-	6	-	7	4	4	-	5	-	4	-	5	-
	32	6	-	-	-	6	-	7	4	4	-	-	-	4	-	5	-
	36	-	-	-	-	6	-	6	-	-	-	-	-	4	-	5	-
	40	-	-	-	-	6	-	-	-	-	-	-	-	4	-	-	-
3 - 5 - 3	20	-	-	-	-	-	-	-	-	-	-	-	-	-	-	-	-
	24	-	-	-	-	-	-	-	-	-	-	-	-	-	-	-	-
	28	-	-	-	-	-	-	-	-	-	-	-	-	-	-	-	-
	32	-	-	-	-	-	-	-	-	-	-	-	-	-	-	-	-
	36	-	-	-	-	-	-	-	-	-	-	-	-	-	-	-	-
	40	-	-	-	-	-	-	-	-	-	-	-	-	-	-	-	-
3 - 5 - 0 S	20	16	14	23	21	16	14	23	21	16	14	23	21	16	14	23	21
	24	16	14	23	21	16	14	23	21	16	14	23	21	16	14	23	21
	28	16	13	23	19	16	14	23	21	16	13	23	19	16	14	23	21
	32	13	7	19	10	16	11	23	14	13	7	19	10	16	11	23	14
	36	8	-	12	6	11	7	15	9	8	-	12	6	11	7	15	8
	40	-	-	7	-	8	6	10	7	-	-	7	-	8	6	10	6
3 - 5 - 1 S	20	13	11	19	18	13	11	19	18	12	10	18	17	12	10	18	17
	24	13	11	19	18	13	11	19	18	12	10	18	17	12	10	18	17
	28	13	11	19	16	13	11	19	18	12	10	18	16	12	10	18	17
	32	11	7	16	10	13	10	19	13	11	7	16	9	12	10	18	13
	36	7	-	11	5	10	7	15	8	7	-	10	5	10	7	14	8
	40	-	-	7	-	8	6	9	7	-	-	7	-	7	6	9	7
3 - 5 - 2 S	20	11	10	17	16	11	10	17	16	9	8	15	14	9	8	15	14
	24	11	10	17	16	11	10	17	16	9	8	15	14	9	8	15	14
	28	11	10	17	15	11	10	17	16	9	8	15	14	9	8	15	14
	32	10	6	15	9	11	10	17	12	9	6	14	8	9	8	6	12
	36	6	-	11	4	10	7	14	8	6	-	10	4	9	7	14	8
	40	-	-	6	-	7	6	9	7	-	-	6	-	7	6	9	6
3 - 5 - 3 S	20	10	8	15	14	10	8	15	14	-	-	-	-	-	-	-	-
	24	10	8	15	14	10	8	15	14	-	-	-	-	-	-	-	-
	28	10	8	15	13	10	8	15	14	-	-	-	-	-	-	-	-
	32	9	6	13	9	10	8	15	12	-	-	-	-	-	-	-	-
	36	6	-	10	-	10	7	13	8	-	-	-	-	-	-	-	-
	40	-	-	6	-	7	6	9	6	-	-	-	-	-	-	-	-
4 - 5 - 0	20	5	-	6	-	5	-	6	-	5	-	6	-	5	-	6	-
	24	5	-	6	-	5	-	6	-	5	-	6	-	5	-	6	-
	28	5	-	6	-	5	-	6	-	5	-	6	-	5	-	6	-
	32	5	-	-	-	5	-	6	-	5	-	-	-	5	-	6	-
	36	-	-	-	-	5	-	6	-	-	-	-	-	5	-	6	-
	40	-	-	-	-	5	-	-	-	-	-	-	-	5	-	-	-
4 - 5 - 1	20	-	-	4	-	-	-	4	-	-	-	-	-	-	-	-	-
	24	-	-	4	-	-	-	4	-	-	-	-	-	-	-	-	-
	28	-	-	4	-	-	-	4	-	-	-	-	-	-	-	-	-
	32	-	-	-	-	-	-	4	-	-	-	-	-	-	-	-	-
	36	-	-	-	-	-	-	4	-	-	-	-	-	-	-	-	-
	40	-	-	-	-	-	-	-	-	-	-	-	-	-	-	-	-
4 - 5 - 2	20	-	-	-	-	-	-	-	-	-	-	-	-	-	-	-	-
	24	-	-	-	-	-	-	-	-	-	-	-	-	-	-	-	-
	28	-	-	-	-	-	-	-	-	-	-	-	-	-	-	-	-
	32	-	-	-	-	-	-	-	-	-	-	-	-	-	-	-	-
	36	-	-	-	-	-	-	-	-	-	-	-	-	-	-	-	-
	40	-	-	-	-	-	-	-	-	-	-	-	-	-	-	-	-
4 - 5 - 3	20	-	-	-	-	-	-	-	-	-	-	-	-	-	-	-	-
	24	-	-	-	-	-	-	-	-	-	-	-	-	-	-	-	-
	28	-	-	-	-	-	-	-	-	-	-	-	-	-	-	-	-
	32	-	-	-	-	-	-	-	-	-	-	-	-	-	-	-	-
	36	-	-	-	-	-	-	-	-	-	-	-	-	-	-	-	-
	40	-	-	-	-	-	-	-	-	-	-	-	-	-	-	-	-

Fully Boarded, Sheeted. 30m max

Designation	S	Lightly loaded inside boards								Fully loaded inside boards							
		Country				Town				Country				Town			
		Ties at alternate lifts		Ties at every lift		Ties at alternate lifts		Ties at every lift		Ties at alternate lifts		Ties at every lift		Ties at alternate lifts		Ties at every lift	
		9a	9b	9d	9e	9a	9b	9d	9e	9a	9b	9d	9e	9a	9b	9d	9e
1 - 3 - 0	20	12	-	10	-	12	-	10	-	12	-	10	-	12	-	10	-
	24	9	-	-	-	11	-	8	-	8	-	-	-	11	-	8	-
	28	-	-	-	-	7	-	6	-	-	-	-	-	7	-	6	-
	32	-	-	-	-	6	-	-	-	-	-	-	-	6	-	-	-
	36	-	-	-	-	-	-	-	-	-	-	-	-	-	-	-	-
	40	-	-	-	-	-	-	-	-	-	-	-	-	-	-	-	-
3 - 5 - 0	20	-	-	-	-	-	-	-	-	-	-	-	-	-	-	-	-
	24	-	-	-	-	-	-	-	-	-	-	-	-	-	-	-	-
	28	-	-	-	-	-	-	-	-	-	-	-	-	-	-	-	-
	32	-	-	-	-	-	-	-	-	-	-	-	-	-	-	-	-
	36	-	-	-	-	-	-	-	-	-	-	-	-	-	-	-	-
	40	-	-	-	-	-	-	-	-	-	-	-	-	-	-	-	-
3 - 5 - 1	20	-	-	-	-	-	-	-	-	-	-	-	-	-	-	-	-
	24	-	-	-	-	-	-	-	-	-	-	-	-	-	-	-	-
	28	-	-	-	-	-	-	-	-	-	-	-	-	-	-	-	-
	32	-	-	-	-	-	-	-	-	-	-	-	-	-	-	-	-
	36	-	-	-	-	-	-	-	-	-	-	-	-	-	-	-	-
	40	-	-	-	-	-	-	-	-	-	-	-	-	-	-	-	-
3 - 5 - 2	20	-	-	-	-	-	-	-	-	-	-	-	-	-	-	-	-
	24	-	-	-	-	-	-	-	-	-	-	-	-	-	-	-	-
	28	-	-	-	-	-	-	-	-	-	-	-	-	-	-	-	-
	32	-	-	-	-	-	-	-	-	-	-	-	-	-	-	-	-
	36	-	-	-	-	-	-	-	-	-	-	-	-	-	-	-	-
	40	-	-	-	-	-	-	-	-	-	-	-	-	-	-	-	-
3 - 5 - 3	20	-	-	-	-	-	-	-	-	-	-	-	-	-	-	-	-
	24	-	-	-	-	-	-	-	-	-	-	-	-	-	-	-	-
	28	-	-	-	-	-	-	-	-	-	-	-	-	-	-	-	-
	32	-	-	-	-	-	-	-	-	-	-	-	-	-	-	-	-
	36	-	-	-	-	-	-	-	-	-	-	-	-	-	-	-	-
	40	-	-	-	-	-	-	-	-	-	-	-	-	-	-	-	-
3 - 5 - 0 S	20	9	5	15	10	9	5	15	10	9	5	15	10	9	5	15	10
	24	9	5	15	7	9	5	15	10	9	5	15	7	9	5	15	10
	28	-	-	7	-	8	5	10	7	-	-	7	-	8	5	10	7
	32	-	-	-	-	6	-	7	6	-	-	-	-	6	-	6	6
	36	-	-	-	-	-	-	6	-	-	-	-	-	-	-	6	-
	40	-	-	-	-	-	-	-	-	-	-	-	-	-	-	-	-
3 - 5 - 1 S	20	7	-	12	8	7	-	12	8	6	-	12	7	6	-	12	7
	24	7	-	12	7	7	-	12	8	6	-	12	7	6	-	12	7
	28	-	-	6	-	7	-	10	7	-	-	7	-	6	-	10	6
	32	-	-	-	-	6	-	7	5	-	-	-	-	6	-	6	5
	36	-	-	-	-	-	-	6	-	-	-	-	-	-	-	6	-
	40	-	-	-	-	-	-	-	-	-	-	-	-	-	-	-	-
3 - 5 - 2 S	20	6	-	11	7	6	-	11	7	4	-	9	5	4	-	9	5
	24	6	-	11	7	6	-	11	7	4	-	9	5	4	-	9	5
	28	-	-	7	-	6	-	10	7	-	-	7	-	4	-	9	5
	32	-	-	-	-	6	-	7	4	-	-	-	-	4	-	6	-
	36	-	-	-	-	-	-	6	-	-	-	-	-	-	-	5	-
	40	-	-	-	-	-	-	-	-	-	-	-	-	-	-	-	-
3 - 5 - 3 S	20	5	-	9	6	5	-	9	6	-	-	-	-	-	-	-	-
	24	5	-	9	6	5	-	9	6	-	-	-	-	-	-	-	-
	28	-	-	6	-	5	-	9	6	-	-	-	-	-	-	-	-
	32	-	-	-	-	5	-	7	-	-	-	-	-	-	-	-	-
	36	-	-	-	-	-	-	5	-	-	-	-	-	-	-	-	-
	40	-	-	-	-	-	-	-	-	-	-	-	-	-	-	-	-
4 - 5 - 0	20	-	-	-	-	-	-	-	-	-	-	-	-	-	-	-	-
	24	-	-	-	-	-	-	-	-	-	-	-	-	-	-	-	-
	28	-	-	-	-	-	-	-	-	-	-	-	-	-	-	-	-
	32	-	-	-	-	-	-	-	-	-	-	-	-	-	-	-	-
	36	-	-	-	-	-	-	-	-	-	-	-	-	-	-	-	-
	40	-	-	-	-	-	-	-	-	-	-	-	-	-	-	-	-
4 - 5 - 1	20	-	-	-	-	-	-	-	-	-	-	-	-	-	-	-	-
	24	-	-	-	-	-	-	-	-	-	-	-	-	-	-	-	-
	28	-	-	-	-	-	-	-	-	-	-	-	-	-	-	-	-
	32	-	-	-	-	-	-	-	-	-	-	-	-	-	-	-	-
	36	-	-	-	-	-	-	-	-	-	-	-	-	-	-	-	-
	40	-	-	-	-	-	-	-	-	-	-	-	-	-	-	-	-
4 - 5 - 2	20	-	-	-	-	-	-	-	-	-	-	-	-	-	-	-	-
	24	-	-	-	-	-	-	-	-	-	-	-	-	-	-	-	-
	28	-	-	-	-	-	-	-	-	-	-	-	-	-	-	-	-
	32	-	-	-	-	-	-	-	-	-	-	-	-	-	-	-	-
	36	-	-	-	-	-	-	-	-	-	-	-	-	-	-	-	-
	40	-	-	-	-	--	-	-	-	-	-	-	-	-	-	-	-
4 - 5 - 3	20	-	-	-	-	-	-	-	-	-	-	-	-	-	-	-	-
	24	-	-	-	-	-	-	-	-	-	-	-	-	-	-	-	-
	28	-	-	-	-	-	-	-	-	-	-	-	-	-	-	-	-
	32	-	-	-	-	-	-	-	-	-	-	-	-	-	-	-	-
	36	-	-	-	-	-	-	-	-	-	-	-	-	-	-	-	-
	40	-	-	-	-	-	-	-	-	-	-	-	-	-	-	-	-

Part Boarded, Unbraced, Unclad. Summary

Designation	S	Lightly loaded inside boards								Fully loaded inside boards							
		Country				Town				Country				Town			
		Ties at alternate lifts		Ties at every lift		Ties at alternate lifts		Ties at every lift		Ties at alternate lifts		Ties at every lift		Ties at alternate lifts		Ties at every lift	
		Safe Height m	Tie force kN	Safe Height m	Tie force kN	Safe Height m	Tie force kN	Safe Height m	Tie force kN	Safe Height m	Tie force kN	Safe Height m	Tie force kN	Safe Height m	Tie force kN	Safe Height m	Tie force kN
1 - 3 - 0	20	30	2.0	28.0	2.0	30	2.0	28	1.9	30	2.0	28	2.0	30	2.0	28	1.9
	24	30	2.9	28.0	2.8	30	2.8	28	2.8	30	2.9	28	2.8	30	2.8	28	2.8
	28	30	3.9	28.0	3.8	30	3.8	28	3.8	30	3.9	28	3.8	30	3.8	28	3.8
	32	30	5.1	28.0	5.0	30	5.0	28	4.9	30	5.1	28	5.0	30	5.0	28	4.9
	36	27	6.3	26.2	6.3	30	6.3	28	6.2	27	6.3	26	6.3	30	6.3	28	6.2
	40	24	7.6	23.4	7.6	30	7.8	28	7.7	24	7.6	23	7.6	30	7.8	28	7.7
3 - 5 - 0	20	6	1.4	-	-	6	1.3	-	-	6	1.4	-	-	6	1.3	-	-
	24	6	2.1	-	-	6	1.6	-	-	6	2.1	-	-	6	1.6	-	-
	28	6	2.8	-	-	6	2.2	-	-	6	2.8	-	-	6	2.2	-	-
	32	6	3.7	-	-	6	2.9	-	-	6	3.7	-	-	6	2.9	-	-
	36	6	4.6	-	-	6	3.6	-	-	6	4.6	-	-	6	3.6	-	-
	40	6	5.7	-	-	6	4.5	-	-	6	5.7	-	-	-	-	-	-
3 - 5 - 1	20	-	-	-	-	-	-	-	-	-	-	-	-	-	-	-	-
	24	-	-	-	-	-	-	-	-	-	-	-	-	-	-	-	-
	28	-	-	-	-	-	-	-	-	-	-	-	-	-	-	-	-
	32	-	-	-	-	-	-	-	-	-	-	-	-	-	-	-	-
	36	-	-	-	-	-	-	-	-	-	-	-	-	-	-	-	-
	40	-	-	-	-	-	-	-	-	-	-	-	-	-	-	-	-
3 - 5 - 2	20	-	-	-	-	-	-	-	-	-	-	-	-	-	-	-	-
	24	-	-	-	-	-	-	-	-	-	-	-	-	-	-	-	-
	28	-	-	-	-	-	-	-	-	-	-	-	-	-	-	-	-
	32	-	-	-	-	-	-	-	-	-	-	-	-	-	-	-	-
	36	-	-	-	-	-	-	-	-	-	-	-	-	-	-	-	-
	40	-	-	-	-	-	-	-	-	-	-	-	-	-	-	-	-
3 - 5 - 3	20	-	-	-	-	-	-	-	-	-	-	-	-	-	-	-	-
	24	-	-	-	-	-	-	-	-	-	-	-	-	-	-	-	-
	28	-	-	-	-	-	-	-	-	-	-	-	-	-	-	-	-
	32	-	-	-	-	-	-	-	-	-	-	-	-	-	-	-	-
	36	-	-	-	-	-	-	-	-	-	-	-	-	-	-	-	-
	40	-	-	-	-	-	-	-	-	-	-	-	-	-	-	-	-
3 - 5 - 0 S	20	20	1.4	15.4	1.3	20	1.3	15	1.2	20	1.4	15	1.3	20	1.3	15	1.2
	24	20	1.9	15.4	1.9	20	1.8	15	1.7	20	1.9	15	1.9	20	1.8	15	1.7
	28	20	2.7	15.4	2.5	20	2.5	15	2.3	20	2.7	15	2.5	20	2.5	15	2.3
	32	20	3.5	15.4	3.3	20	3.3	15	3.0	20	3.5	15	3.3	20	3.3	15	3.0
	36	20	4.4	15.4	4.2	20	4.1	15	3.8	20	4.4	15	4.2	20	4.1	15	3.8
	40	20	5.4	15.4	5.1	20	5.1	15	4.7	20	5.4	15	5.1	20	5.1	15	4.7
3 - 5 - 1 S	20	15	1.3	10.7	1.2	15	1.2	11	1.0	12	1.2	8	1.1	12	1.1	8	1.0
	24	15	1.8	10.7	1.7	15	1.7	11	1.5	12	1.8	8	1.6	12	1.6	8	1.4
	28	15	2.5	10.7	2.3	15	2.3	11	2.0	12	2.4	8	2.2	12	2.1	8	1.3
	32	15	3.3	10.7	3.1	15	3.0	11	2.7	12	3.1	8	2.9	12	2.8	8	2.4
	36	15	4.1	10.7	3.9	15	3.8	11	3.4	12	4.0	8	3.7	12	3.5	8	3.1
	40	15	5.1	10.7	4.8	15	4.6	11	4.2	12	4.9	8	4.5	12	4.4	8	3.8
3 - 5 - 2 S	20	12	1.2	8.0	1.1	12	1.1	8	1.0	7	1.1	-	-	7	1.0	-	-
	24	12	1.8	8.0	1.6	12	1.5	8	1.3	7	1.6	-	-	7	1.3	-	-
	28	12	2.4	8.0	2.2	12	2.1	8	1.8	7	2.1	-	-	7	1.7	-	-
	32	12	3.1	8.0	2.9	12	2.8	8	2.4	7	2.8	-	-	7	2.3	-	-
	36	12	3.9	8.0	3.6	12	3.5	8	3.0	7	3.5	-	-	7	2.9	-	-
	40	12	4.9	8.0	4.5	12	4.3	8	3.7	7	4.4	-	-	7	3.5	-	-
3 - 5 - 3 S	20	9	1.2	5.5	1.0	9	1.0	6	1.0	-	-	-	-	-	-	-	-
	24	9	1.7	5.5	1.5	9	1.4	6	1.1	-	-	-	-	-	-	-	-
	28	9	2.3	5.5	2.0	9	1.9	6	1.5	-	-	-	-	-	-	-	-
	32	9	2.9	5.5	2.6	9	2.5	6	2.0	-	-	-	-	-	-	-	-
	36	9	3.7	5.5	3.3	9	3.2	6	2.5	-	-	-	-	-	-	-	-
	40	9	4.6	5.5	4.1	9	3.9	6	3.1	-	-	-	-	-	-	-	-
4 - 5 - 0	20	-	-	-	-	-	-	-	-	-	-	-	-	-	-	-	-
	24	-	-	-	-	-	-	-	-	-	-	-	-	-	-	-	-
	28	-	-	-	-	-	-	-	-	-	-	-	-	-	-	-	-
	32	-	-	-	-	-	-	-	-	-	-	-	-	-	-	-	-
	36	-	-	-	-	-	-	-	-	-	-	-	-	-	--	-	-
	40	-	-	-	-	-	-	-	-	-	-	-	-	-	-	-	-
4 - 5 - 1	20	-	-	-	-	-	-	-	-	-	-	-	-	-	-	-	-
	24	-	-	-	-	-	-	-	-	-	-	-	-	-	-	-	-
	28	-	-	-	-	-	-	-	-	-	-	-	-	-	-	-	-
	32	-	-	-	-	-	-	-	-	-	-	-	-	-	-	-	-
	36	-	-	-	-	-	-	-	-	-	-	-	-	-	-	-	-
	40	-	-	-	-	-	-	-	-	-	-	-	-	-	-	-	-
4 - 5 - 2	20	-	-	-	-	-	-	-	-	-	-	-	-	-	-	-	-
	24	-	-	-	-	-	-	-	-	-	-	-	-	-	-	-	-
	28	-	-	-	-	-	-	-	-	-	-	-	-	-	-	-	-
	32	-	-	-	-	-	-	-	-	-	-	-	-	-	-	-	-
	36	-	-	-	-	-	-	-	-	-	-	-	-	-	-	-	-
	40	-	-	-	-	-	-	-	-	-	-	-	-	-	-	-	-
4 - 5 - 3	20	-	-	-	-	-	-	-	-	-	-	-	-	-	-	-	-
	24	-	-	-	-	-	-	-	-	-	-	-	-	-	-	-	-
	28	-	-	-	-	-	-	-	-	-	-	-	-	-	-	-	-
	32	-	-	-	-	-	-	-	-	-	-	-	-	-	-	-	-
	36	-	-	-	-	-	-	-	-	-	-	-	-	-	-	-	-
	40	-	-	-	-	-	-	-	-	-	-	-	-	-	-	-	-

Part Boarded, Braced, Unclad. Summary

Designation	S	Lightly loaded inside boards								Fully loaded inside boards							
		Country				Town				Country				Town			
		Ties at alternate lifts		Ties at every lift		Ties at alternate lifts		Ties at every lift		Ties at alternate lifts		Ties at every lift		Ties at alternate lifts		Ties at every lift	
		Safe Height m	Tie force kN	Safe Height m	Tie force kN	Safe Height m	Tie force kN	Safe Height m	Tie force kN	Safe Height m	Tie force kN	Safe Height m	Tie force kN	Safe Height m	Tie force kN	Safe Height m	Tie force kN
1 - 3 - 0	20	30	2.0	30	2.0	30	2.0	30	2.0	30	2.0	30	2.0	30	2.0	30	2.0
	24	30	2.9	30	2.9	30	2.8	30	2.8	30	2.9	30	2.9	30	2.8	30	2.8
	28	30	3.9	30	3.9	30	3.8	30	3.8	30	3.9	30	3.9	30	3.8	30	3.8
	32	30	5.1	30	5.1	30	5.0	30	5.0	30	5.1	30	5.1	30	5.0	30	5.0
	36	25	6.4	30	6.4	24	6.3	30	6.3	25	6.4	30	6.4	24	6.3	30	6.3
	40	10	7.1	14	7.6	12	6.7	16	7.3	10	7.1	14	7.6	14	6.7	16	7.3
3 - 5 - 0	20	21	1.9	27	2.0	21	1.8	27	2.0	21	1.9	27	2.0	21	1.8	27	2.0
	24	21	2.7	27	2.9	21	2.6	27	2.8	21	2.7	27	2.9	21	2.6	27	2.8
	28	21	3.7	27	3.9	21	3.5	27	3.8	21	3.7	27	3.9	21	3.5	27	3.8
	32	21	4.8	27	5.1	21	4.6	27	5.0	21	4.8	27	5.1	21	4.6	27	5.0
	36	14	6.1	20	6.4	16	5.8	22	6.3	14	6.1	22	6.4	16	5.8	22	6.3
	40	8	6.4	10	7.1	10	6.2	12	6.7	8	6.4	10	7.1	10	6.2	12	6.7
3 - 5 - 1	20	16	1.8	21	1.9	16	1.7	21	1.9	14	1.7	19	1.9	14	1.6	19	1.8
	24	16	2.6	21	2.8	16	2.4	21	2.7	14	2.5	19	2.7	14	2.3	19	2.6
	28	16	3.5	21	3.8	16	3.2	21	3.6	14	3.4	19	3.7	14	3.1	19	3.5
	32	16	4.6	21	4.9	16	4.2	21	4.7	14	4.4	19	4.8	14	4.0	19	4.6
	36	12	5.8	18	6.2	16	5.4	20	6.0	12	5.6	16	6.1	14	5.1	19	5.8
	40	6	6.1	8	6.9	10	5.9	12	6.5	6	6.1	8	6.7	10	5.9	12	6.5
3 - 5 - 2	20	13	1.7	18	1.9	13	1.6	18	1.8	9	1.6	14	1.8	9	1.4	14	1.7
	24	13	2.5	18	2.7	13	2.2	18	2.6	9	2.3	14	2.6	9	2.0	14	2.4
	28	13	3.4	18	3.7	13	3.1	18	3.5	9	3.1	14	3.5	9	2.7	14	3.3
	32	13	4.4	18	4.8	13	4.0	18	4.6	9	4.1	14	4.6	9	3.5	14	4.3
	36	10	5.6	16	6.1	13	5.1	18	5.8	9	5.1	14	5.8	9	4.4	14	5.4
	40	6	6.1	8	6.7	8	5.9	10	6.5	6	6.1	8	6.7	9	5.4	10	6.2
3 - 5 - 3	20	-	-	-	-	-	-	-	-	-	-	-	-	-	-	-	-
	24	-	-	-	-	-	-	-	-	-	-	-	-	-	-	-	-
	28	-	-	-	-	-	-	-	-	-	-	-	-	-	-	-	-
	32	-	-	-	-	-	-	-	-	-	-	-	-	-	-	-	-
	36	-	-	-	-	-	-	-	-	-	-	-	-	-	-	-	-
	40	-	-	-	-	-	-	-	-	-	-	-	-	-	-	-	-
3 - 5 - 0 S	20	30	1.5	30	1.5	30	1.4	30	1.4	30	1.5	30	1.5	30	1.4	30	1.4
	24	30	2.1	30	2.1	30	2.1	30	2.1	30	2.1	30	2.1	30	2.1	30	2.1
	28	30	2.9	30	2.9	30	2.8	30	2.8	30	2.9	30	2.9	30	2.8	30	2.8
	32	30	3.7	30	3.7	30	3.7	30	3.7	30	3.7	30	3.7	30	3.7	30	3.7
	36	30	4.7	30	4.7	30	4.7	30	4.7	30	4.7	30	4.7	30	4.7	30	4.7
	40	27	5.8	30	5.8	30	5.8	30	5.8	27	5.8	30	5.8	30	5.8	30	5.8
3 - 5 - 1 S	20	28	1.4	30	1.5	28	1.4	30	1.4	26	1.4	30	1.5	26	1.4	30	1.4
	24	28	2.1	30	2.1	28	2.0	30	2.1	26	2.1	30	2.1	26	2.0	30	2.1
	28	28	2.8	30	2.9	28	2.8	30	2.8	26	2.8	30	2.9	26	2.7	30	2.8
	32	28	3.7	30	3.7	28	3.6	30	3.7	26	3.7	30	3.7	26	3.6	30	3.7
	36	28	4.7	30	4.7	28	4.6	30	4.7	26	4.6	30	4.7	26	4.5	30	4.7
	40	23	5.7	30	5.8	28	5.7	30	5.8	23	5.6	30	5.8	26	5.6	30	5.8
3 - 5 - 2 S	20	25	1.4	30	1.5	25	1.4	30	1.4	21	1.4	30	1.5	21	1.3	30	1.4
	24	25	2.0	30	2.1	25	2.0	30	2.1	21	2.0	30	2.1	21	1.9	30	2.1
	28	25	2.4	30	2.9	25	2.7	30	2.8	21	2.7	30	2.9	21	2.6	30	2.8
	32	25	3.6	30	3.7	25	3.5	30	3.7	21	3.5	30	3.7	21	3.4	30	3.7
	36	25	4.6	30	4.7	25	4.5	30	4.7	21	4.5	30	4.7	21	4.3	30	4.7
	40	21	5.6	30	5.8	25	5.5	30	5.8	21	5.5	30	5.8	21	5.3	30	5.8
3 - 5 - 3 S	20	22	1.4	30	1.5	22	1.3	30	1.4	-	-	-	-	-	-	-	-
	24	22	2.0	30	2.1	22	1.9	30	2.1	-	-	-	-	-	-	-	-
	28	22	2.7	30	2.9	22	2.6	30	2.8	-	-	-	-	-	-	-	-
	32	22	3.5	30	3.7	22	3.4	30	3.7	-	-	-	-	-	-	-	-
	36	22	4.5	30	4.7	22	4.3	30	4.7	-	-	-	-	-	-	-	-
	40	19	5.5	30	5.8	22	5.3	30	5.8	-	-	-	-	-	-	-	-
4 - 5 - 0	20	10	1.6	16	1.8	10	1.4	16	1.8	10	1.6	16	1.8	10	1.4	16	1.8
	24	10	2.4	16	2.7	10	2.1	16	2.5	10	2.4	16	2.7	10	2.1	16	2.5
	28	10	3.2	16	3.6	10	2.8	16	3.4	10	3.2	16	3.6	10	2.8	16	3.4
	32	10	4.2	16	4.7	10	3.7	16	4.5	10	4.2	16	4.7	10	3.7	16	4.5
	36	8	5.3	12	6.0	10	4.7	16	5.7	8	5.3	12	6.0	10	4.7	14	5.7
	40	4	5.7	6	6.4	8	5.5	12	6.5	4	5.7	6	6.4	8	5.5	10	5.9
4 - 5 - 1	20	6	1.5	12	1.8	6	1.3	12	1.6	-	-	7	1.6	-	-	7	1.4
	24	6	2.2	12	2.5	6	1.8	12	2.3	-	-	7	2.4	-	-	7	2.1
	28	6	2.9	12	3.4	6	2.4	12	3.1	-	-	7	3.2	-	-	7	2.8
	32	6	3.8	12	4.5	6	3.1	12	4.1	-	-	7	4.2	-	-	7	3.7
	36	6	4.9	10	5.7	6	4.0	12	5.2	-	-	7	5.3	-	-	7	4.7
	40	6	5.7	6	6.1	6	4.9	12	5.9	-	-	5	6.1	-	-	7	5.7
4 - 5 - 2	20	4	1.4	9	1.7	4	1.3	9	1.5	-	-	-	-	-	-	-	-
	24	4	2.0	9	2.4	4	1.5	9	2.2	-	-	-	-	-	-	-	-
	28	4	2.7	9	3.3	4	2.0	9	2.9	-	-	-	-	-	-	-	-
	32	4	3.5	9	4.3	4	2.6	9	3.8	-	-	-	-	-	-	-	-
	36	4	4.4	9	5.5	4	3.3	9	4.9	-	-	-	-	-	-	-	-
	40	5	5.4	9	6.1	4	4.1	8	5.5	-	-	-	-	-	-	-	-
4 - 5 - 3	20	-	-	-	-	-	-	-	-	-	-	-	-	-	-	-	-
	24	-	-	-	-	-	-	-	-	-	-	-	-	-	-	-	-
	28	-	-	-	-	-	-	-	-	-	-	-	-	-	-	-	-
	32	-	-	-	-	-	-	-	-	-	-	-	-	-	-	-	-
	36	-	-	-	-	-	-	-	-	-	-	-	-	-	-	-	-
	40	-	-	-	-	-	-	-	-	-	-	-	-	-	-	-	-

Part Boarded, Braced, Debris Netted. Summary

Designation	S	Lightly loaded inside boards								Fully loaded inside boards							
		Country				Town				Country				Town			
		Ties at alternate lifts		Ties at every lift		Ties at alternate lifts		Ties at every lift		Ties at alternate lifts		Ties at every lift		Ties at alternate lifts		Ties at every lift	
		Safe Height m	Tie force kN	Safe Height m	Tie force kN	Safe Height m	Tie force kN	Safe Height m	Tie force kN	Safe Height m	Tie force kN	Safe Height m	Tie force kN	Safe Height m	Tie force kN	Safe Height m	Tie force kN
1 - 3 - 0	20	26	3.8	30	3.8	26	3.8	30	3.8	26	3.8	30	3.8	26	3.8	30	3.8
	24	16	4.2	18	4.2	18	4.1	18	4.1	16	4.2	18	4.2	18	4.1	20	4.1
	28	6	5.6	6	4.8	10	5.6	10	4.7	6	5.6	6	4.8	10	5.6	10	5.6
	32	10	6.0	6	5.4	6	5.8	6	4.7	10	6.0	6	5.4	6	5.8	6	7.4
	36	4	6.1	-	-	6	6.0	6	5.3	6	6.8	-	-	6	6.0	6	7.7
	40	-	-	-	-	6	6.5	6	6.5	30	11.6	-	-	6	6.5	10	8.1
3 - 5 - 0	20	6	3.8	10	3.8	6	3.8	10	3.8	6	3.8	10	3.8	6	3.8	10	3.8
	24	6	3.8	10	3.8	6	3.8	10	3.8	6	3.8	10	3.8	6	3.8	10	4.0
	28	15	5.0	5	4.6	6	4.6	8	4.2	15	5.0	5	4.6	6	4.6	8	5.5
	32	8	5.7	4	4.9	6	5.2	6	4.7	8	5.7	4	4.9	6	5.2	6	6.9
	36	-	-	-	-	8	6.0	6	5.3	-	-	-	-	8	6.0	12	7.0
	40	-	-	-	-	6	6.5	4	5.6	-	-	-	-	6	6.5	8	7.4
3 - 5 - 1	20	11	3.8	6	3.8	11	3.8	6	3.8	9	3.8	4	3.8	9	3.8	4	3.8
	24	11	3.8	6	3.8	11	3.8	6	3.8	9	3.8	4	3.8	9	3.8	4	3.8
	28	11	4.7	8	4.4	11	4.1	6	4.2	9	4.5	8	4.4	9	3.8	4	4.9
	32	6	5.4	-	-	10	5.2	6	4.7	6	5.4	-	-	9	4.9	4	6.4
	36	-	-	-	-	6	5.3	6	5.3	-	-	-	-	6	5.3	12	7.0
	40	-	-	-	-	6	6.5	-	-	-	-	-	-	6	6.5	8	7.4
3 - 5 - 2	20	9	3.8	4	3.8	9	3.8	4	3.8	-	-	6	3.8	-	-	14	3.8
	24	9	3.8	4	3.8	9	3.8	4	3.8	-	-	6	3.8	-	-	14	3.8
	28	9	4.5	8	4.4	9	3.8	4	4.1	-	-	6	4.1	-	-	14	4.4
	32	6	5.4	-	-	9	4.9	4	4.2	-	-	-	-	-	-	14	5.8
	36	-	-	-	-	6	5.3	6	5.3	-	-	-	-	-	-	10	6.6
	40	-	-	-	-	6	6.5	-	-	-	-	-	-	-	-	8	7.4
3 - 5 - 3	20	-	-	-	-	-	-	-	-	-	-	-	-	-	-	-	-
	24	-	-	-	-	-	-	-	-	-	-	-	-	-	-	-	-
	28	-	-	-	-	-	-	-	-	-	-	-	-	-	-	-	-
	32	-	-	-	-	-	-	-	-	-	-	-	-	-	-	-	-
	36	-	-	-	-	-	-	-	-	-	-	-	-	-	-	-	-
	40	-	-	-	-	-	-	-	-	-	-	-	-	-	-	-	-
3 - 5 - 0 S	20	23	2.9	30	2.9	23	2.9	30	2.9	23	2.9	30	2.9	23	2.9	30	2.9
	24	23	3.1	30	3.1	23	3.0	30	3.1	23	3.1	30	3.1	23	3.0	30	3.1
	28	16	4.2	30	4.3	18	4.1	28	4.2	16	4.2	30	4.3	18	4.1	14	4.1
	32	6	5.0	10	5.6	10	4.8	12	5.5	6	5.0	10	5.6	10	4.8	8	4.2
	36	6	5.1	6	5.9	6	4.9	8	5.5	6	5.1	6	5.9	6	4.9	6	4.5
	40	-	-	6	6.3	6	5.6	6	6.1	-	-	6	6.3	6	5.6	6	4.9
3 - 5 - 1 S	20	18	2.9	30	2.9	18	2.9	30	2.9	16	2.9	30	2.9	16	2.9	24	2.9
	24	18	3.0	30	3.1	18	2.9	30	3.1	16	2.9	30	3.1	16	2.9	24	3.1
	28	14	4.0	26	4.3	18	3.9	26	4.2	14	4.0	26	4.3	16	3.8	14	4.1
	32	6	4.8	8	5.6	10	4.6	12	5.4	6	4.8	8	5.6	10	4.6	8	4.2
	36	6	5.1	5	5.7	6	4.9	8	5.5	6	5.1	5	5.7	6	4.9	6	4.5
	40	-	-	6	6.3	6	4.9	6	5.6	-	-	6	6.3	6	4.9	6	4.9
3 - 5 - 2 S	20	16	2.9	29	2.9	16	2.9	29	2.9	12	2.9	25	2.9	12	2.9	20	2.9
	24	16	2.9	29	3.1	16	2.9	29	3.1	12	2.9	25	3.1	12	2.9	20	3.0
	28	12	4.0	24	4.3	16	3.7	24	4.2	12	3.8	24	4.2	12	3.4	12	4.0
	32	4	4.7	8	5.5	8	4.6	12	5.3	6	4.7	8	5.4	8	4.4	8	4.2
	36	6	5.1	4	5.7	6	4.9	8	5.3	6	5.1	10	5.7	6	4.5	6	4.5
	40	-	-	6	6.3	6	4.9	6	5.6	-	-	6	6.3	6	4.9	6	4.9
3 - 5 - 3 S	20	13	2.9	26	2.9	13	2.9	26	2.9	-	-	-	-	-	-	-	-
	24	13	2.9	26	3.1	13	2.9	26	3.1	-	-	-	-	-	-	-	-
	28	12	3.8	22	4.3	13	3.6	24	4.2	-	-	-	-	-	-	-	-
	32	6	4.7	8	5.4	8	4.4	12	5.2	-	-	-	-	-	-	-	-
	36	6	5.1	10	5.7	6	4.5	8	5.3	-	-	-	-	-	-	-	-
	40	-	-	6	6.3	6	4.9	6	5.6	-	-	-	-	-	-	-	-
4 - 5 - 0	20	5	3.8	7	3.8	5	3.8	7	3.8	5	3.8	7	3.8	5	3.8	16	3.8
	24	5	3.8	7	3.8	5	3.8	7	3.8	5	3.8	7	3.8	5	3.8	16	3.8
	28	5	3.8	7	4.3	5	3.8	7	3.8	5	3.8	7	4.3	5	3.8	16	4.7
	32	4	5.0	-	-	5	3.8	7	4.6	4	5.0	-	-	5	3.8	16	6.1
	36	-	-	-	-	5	4.6	6	5.3	-	-	-	-	5	4.6	10	6.6
	40	-	-	-	-	5	5.6	-	-	-	-	-	-	5	5.6	6	6.5
4 - 5 - 1	20	-	-	4	3.8	-	-	4	3.8	-	-	-	-	-	-	8	3.8
	24	-	-	4	3.8	-	-	4	3.8	-	-	-	-	-	-	8	3.8
	28	-	-	4	3.8	-	-	4	3.8	-	-	-	-	-	-	8	3.8
	32	-	-	-	-	-	-	4	3.8	-	-	-	-	-	-	8	4.6
	36	-	-	-	-	-	-	4	4.3	-	-	-	-	-	-	8	5.9
	40	-	-	-	-	-	-	-	-	-	-	-	-	-	-	6	6.5
4 - 5 - 2	20	-	-	-	-	-	-	-	-	-	-	-	-	-	-	-	-
	24	-	-	-	-	-	-	-	-	-	-	-	-	-	-	-	-
	28	-	-	-	-	-	-	-	-	-	-	-	-	-	-	-	-
	32	-	-	-	-	-	-	-	-	-	-	-	-	-	-	-	-
	36	-	-	-	-	-	-	-	-	-	-	-	-	-	-	-	-
	40	-	-	-	-	-	-	-	-	-	-	-	-	-	-	-	-
4 - 5 - 3	20	-	-	-	-	-	-	-	-	-	-	-	-	-	-	-	-
	24	-	-	-	-	-	-	-	-	-	-	-	-	-	-	-	-
	28	-	-	-	-	-	-	-	-	-	-	-	-	-	-	-	-
	32	-	-	-	-	-	-	-	-	-	-	-	-	-	-	-	-
	36	-	-	-	-	-	-	-	-	-	-	-	-	-	-	-	-
	40	-	-	-	-	-	-	-	-	-	-	-	-	-	-	-	-

Part Boarded, Braced, Sheeted. Summary

Designation	S	Lightly loaded inside boards								Fully loaded inside boards							
		Country				Town				Country				Town			
		Ties at alternate lifts		Ties at every lift		Ties at alternate lifts		Ties at every lift		Ties at alternate lifts		Ties at every lift		Ties at alternate lifts		Ties at every lift	
		Safe Height m	Tie force kN	Safe Height m	Tie force kN	Safe Height m	Tie force kN	Safe Height m	Tie force kN	Safe Height m	Tie force kN	Safe Height m	Tie force kN	Safe Height m	Tie force kN	Safe Height m	Tie force kN
1 - 3 - 0	20	19	5.4	12	4.9	19	5.1	15	4.6	19	5.4	12	1.7	19	5.1	15	4.6
	24	8	6.4	-	-	10	5.8	8	5.3	8	6.4	-	-	10	5.8	8	5.3
	28	-	-	-	-	6	6.4	6	6.4	-	-	-	-	6	6.4	6	6.4
	32	-	-	-	-	6	8.3	-	-	-	-	-	-	6	8.3	-	-
	36	-	-	-	-	-	-	-	-	-	-	-	-	-	-	-	-
	40	-	-	-	-	-	-	-	-	-	-	-	-	-	-	-	-
3 - 5 - 0	20	-	-	-	-	-	-	-	-	-	-	-	-	-	-	-	-
	24	-	-	-	-	-	-	-	-	-	-	-	-	-	-	-	-
	28	-	-	-	-	-	-	-	-	-	-	-	-	-	-	-	-
	32	-	-	-	-	-	-	-	-	-	-	-	-	-	-	-	-
	36	-	-	-	-	-	-	-	-	-	-	-	-	-	-	-	-
	40	-	-	-	-	-	-	-	-	-	-	-	-	-	-	-	-
3 - 5 - 1	20	-	-	-	-	-	-	-	-	-	-	-	-	-	-	-	-
	24	-	-	-	-	-	-	-	-	-	-	-	-	-	-	-	-
	28	-	-	-	-	-	-	-	-	-	-	-	-	-	-	-	-
	32	-	-	-	-	-	-	-	-	-	-	-	-	-	-	-	-
	36	-	-	-	-	-	-	-	-	-	-	-	-	-	-	-	-
	40	-	-	-	-	-	-	-	-	-	-	-	-	-	-	-	-
3 - 5 - 2	20	-	-	-	-	-	-	-	-	-	-	-	-	-	-	-	-
	24	-	-	-	-	-	-	-	-	-	-	-	-	-	-	-	-
	28	-	-	-	-	-	-	-	-	-	-	-	-	-	-	-	-
	32	-	-	-	-	-	-	-	-	-	-	-	-	-	-	-	-
	36	-	-	-	-	-	-	-	-	-	-	-	-	-	-	-	-
	40	-	-	-	-	-	-	-	-	-	-	-	-	-	-	-	-
3 - 5 - 3	20	-	-	-	-	-	-	-	-	-	-	-	-	-	-	-	-
	24	-	-	-	-	-	-	-	-	-	-	-	-	-	-	-	-
	28	-	-	-	-	-	-	-	-	-	-	-	-	-	-	-	-
	32	-	-	-	-	-	-	-	-	-	-	-	-	-	-	-	-
	36	-	-	-	-	-	-	-	-	-	-	-	-	-	-	-	-
	40	-	-	-	-	-	-	-	-	-	-	-	-	-	-	-	-
3 - 5 - 0 S	20	4	3.7	16	4.3	4	3.3	16	4.2	4	3.7	16	4.3	4	3.3	16	4.2
	24	4	5.1	6	5.7	4	4.8	10	5.5	4	5.1	6	5.7	4	4.8	10	5.5
	28	-	-	6	6.2	4	5.4	6	5.9	-	-	6	6.2	4	5.4	6	5.9
	32	-	-	-	-	6	6.3	6	6.3	-	-	-	-	6	6.3	6	6.3
	36	-	-	-	-	-	-	6	7.9	-	-	-	-	-	-	6	7.9
	40	-	-	-	-	-	-	-	-	-	-	-	-	-	-	-	-
3 - 5 - 1 S	20	9	3.5	12	4.1	9	2.9	12	3.9	7	3.3	10	4.0	7	2.9	10	3.8
	24	9	5.0	6	5.6	9	4.2	10	5.5	7	4.7	6	5.6	7	3.8	10	5.5
	28	-	-	6	6.2	8	5.4	6	5.9	-	-	6	6.2	7	5.2	6	5.9
	32	-	-	-	-	6	6.3	5	6.3	-	-	-	-	6	6.3	5	6.3
	36	-	-	-	-	-	-	6	7.9	-	-	-	-	-	-	6	7.9
	40	-	-	-	-	-	-	-	-	-	-	-	-	-	-	-	-
3 - 5 - 2 S	20	7	3.3	10	4.0	7	2.9	10	3.8	-	-	6	3.8	-	-	6	3.5
	24	7	4.7	6	5.6	7	3.8	10	5.4	-	-	6	5.5	-	-	6	5.0
	28	-	-	6	6.2	6	4.8	6	5.4	-	-	6	6.2	-	-	6	5.4
	32	-	-	-	-	6	6.3	6	6.3	-	-	-	-	-	-	6	6.3
	36	-	-	-	-	-	-	6	7.9	-	-	-	-	-	-	6	7.9
	40	-	-	-	-	-	-	-	-	-	-	-	-	-	-	-	-
3 - 5 - 3 S	20	5	3.0	8	3.9	5	2.9	8	3.6	-	-	-	-	-	-	-	-
	24	5	4.3	6	5.4	5	3.2	8	5.2	-	-	-	-	-	-	-	-
	28	-	-	6	6.2	5	4.4	6	5.4	-	-	-	-	-	-	-	-
	32	-	-	-	-	6	6.3	6	6.3	-	-	-	-	-	-	-	-
	36	-	-	-	-	-	-	6	7.9	-	-	-	-	-	-	-	-
	40	-	-	-	-	-	-	-	-	-	-	-	-	-	-	-	-
4 - 5 - 0	20	-	-	-	-	-	-	-	-	-	-	-	-	-	-	-	-
	24	-	-	-	-	-	-	-	-	-	-	-	-	-	-	-	-
	28	-	-	-	-	-	-	-	-	-	-	-	-	-	-	-	-
	32	-	-	-	-	-	-	-	-	-	-	-	-	-	-	-	-
	36	-	-	-	-	-	-	-	-	-	-	-	-	-	-	-	-
	40	-	-	-	-	-	-	-	-	-	-	-	-	-	-	-	-
4 - 5 - 1	20	-	-	-	-	-	-	-	-	-	-	-	-	-	-	-	-
	24	-	-	-	-	-	-	-	-	-	-	-	-	-	-	-	-
	28	-	-	-	-	-	-	-	-	-	-	-	-	-	-	-	-
	32	-	-	-	-	-	-	-	-	-	-	-	-	-	-	-	-
	36	-	-	-	-	-	-	-	-	-	-	-	-	-	-	-	-
	40	-	-	-	-	-	-	-	-	-	-	-	-	-	-	-	-
4 - 5 - 2	20	-	-	-	-	-	-	-	-	-	-	-	-	-	-	-	-
	24	-	-	-	-	-	-	-	-	-	-	-	-	-	-	-	-
	28	-	-	-	-	-	-	-	-	-	-	-	-	-	-	-	-
	32	-	-	-	-	-	-	-	-	-	-	-	-	-	-	-	-
	36	-	-	-	-	-	-	-	-	-	-	-	-	-	-	-	-
	40	-	-	-	-	-	-	-	-	-	-	-	-	-	-	-	-
4 - 5 - 3	20	-	-	-	-	-	-	-	-	-	-	-	-	-	-	-	-
	24	-	-	-	-	-	-	-	-	-	-	-	-	-	-	-	-
	28	-	-	-	-	-	-	-	-	-	-	-	-	-	-	-	-
	32	-	-	-	-	-	-	-	-	-	-	-	-	-	-	-	-
	36	-	-	-	-	-	-	-	-	-	-	-	-	-	-	-	-
	40	-	-	-	-	-	-	-	-	-	-	-	-	-	-	-	-

Fully Boarded, Unclad. Summary

Designation	S	Lightly loaded inside boards								Fully loaded inside boards							
		Country				Town				Country				Town			
		Ties at alternate lifts		Ties at every lift		Ties at alternate lifts		Ties at every lift		Ties at alternate lifts		Ties at every lift		Ties at alternate lifts		Ties at every lift	
		Safe Height m	Tie force kN	Safe Height m	Tie force kN	Safe Height m	Tie force kN	Safe Height m	Tie force kN	Safe Height m	Tie force kN	Safe Height m	Tie force kN	Safe Height m	Tie force kN	Safe Height m	Tie force kN
1 - 3 - 0	20	24	1.9	27	2.0	24	1.9	27	1.9	24	1.9	27	2.0	24	1.9	27	1.9
	24	24	2.8	27	2.8	24	2.7	27	2.8	24	2.8	27	2.8	24	2.7	27	2.8
	28	22	3.7	25	3.8	24	3.6	27	3.8	22	3.7	25	3.8	24	3.6	27	3.8
	32	19	4.7	22	4.9	24	4.7	27	5.0	19	4.7	22	4.9	24	4.7	27	5.0
	36	16	5.8	18	6.0	22	5.9	25	6.2	16	5.8	18	6.0	22	5.9	25	6.2
	40	12	6.9	14	7.2	15	7.0	22	7.4	12	6.9	14	7.2	15	7.0	17	7.4
3 - 5 - 0	20	12	1.7	14	1.8	12	1.5	14	1.6	12	1.7	14	1.8	12	1.5	14	1.6
	24	12	2.4	14	2.5	12	2.1	14	2.3	12	2.4	14	2.5	12	2.1	14	2.3
	28	12	3.3	14	3.5	12	2.9	14	3.2	12	3.3	14	3.5	12	2.9	14	3.2
	32	12	4.3	14	4.5	12	3.8	14	4.2	12	4.3	14	4.5	12	3.8	14	4.2
	36	11	5.4	13	5.7	12	4.8	14	5.3	11	5.4	13	5.7	12	4.8	14	5.3
	40	8	6.3	10	6.7	12	5.9	14	6.5	8	6.3	10	6.7	12	5.9	13	6.5
3 - 5 - 1	20	9	1.6	12	1.7	9	1.4	12	1.5	8	1.6	11	1.7	8	1.3	11	1.5
	24	9	2.3	12	2.4	9	2.0	12	2.2	8	2.2	11	2.4	8	1.9	11	2.1
	28	9	3.1	12	3.3	9	2.7	12	3.0	8	3.0	11	3.3	8	2.6	11	2.9
	32	9	4.1	12	4.3	9	3.5	12	3.9	8	4.0	11	4.3	8	3.3	11	3.8
	36	9	5.2	11	5.5	9	4.4	12	4.9	8	5.0	11	5.4	8	4.2	11	4.8
	40	6	6.1	8	6.5	9	5.5	12	6.1	6	6.1	8	6.4	8	5.2	11	5.9
3 - 5 - 2	20	8	1.5	10	1.6	8	1.3	10	1.4	6	1.5	8	1.6	8	1.3	8	1.4
	24	8	2.2	10	2.4	8	1.8	10	2.1	6	2.1	8	2.3	6	1.7	8	1.9
	28	8	3.0	10	3.2	8	2.5	10	2.8	6	2.8	8	3.1	6	2.3	8	2.7
	32	8	3.9	10	4.2	8	3.3	10	3.7	6	3.7	8	4.1	6	2.9	8	3.5
	36	8	5.0	10	5.3	8	4.1	10	4.7	6	4.7	8	5.1	6	3.7	8	4.4
	40	6	5.9	7	6.3	8	5.1	10	5.8	5	5.8	7	6.3	6	4.6	8	5.4
3 - 5 - 3	20	-	-	-	-	-	-	-	-	-	-	-	-	-	-	-	-
	24	-	-	-	-	-	-	-	-	-	-	-	-	-	-	-	-
	28	-	-	-	-	-	-	-	-	-	-	-	-	-	-	-	-
	32	-	-	-	-	-	-	-	-	-	-	-	-	-	-	-	-
	36	-	-	-	-	-	-	-	-	-	-	-	-	-	-	-	-
	40	-	-	-	-	-	-	-	-	-	-	-	-	-	-	-	-
3 - 5 - 0 S	20	19	1.3	27	1.4	19	1.3	27	1.4	19	1.3	27	1.4	19	1.3	27	1.4
	24	19	1.9	27	2.1	19	1.8	27	2.0	19	1.9	27	2.1	19	1.8	27	2.0
	28	19	2.6	27	2.8	19	2.5	27	2.8	19	2.6	27	2.8	19	2.5	27	2.8
	32	19	3.4	27	3.7	19	3.2	27	3.6	19	3.4	27	3.7	19	3.2	27	3.6
	36	18	4.3	26	4.6	19	4.1	27	4.6	18	4.3	26	4.6	19	4.1	27	4.6
	40	15	5.2	23	5.6	19	5.1	27	5.6	15	5.2	23	5.6	19	5.1	27	5.6
3 - 5 - 1 S	20	16	1.3	23	1.4	16	1.2	23	1.3	15	1.3	22	1.4	15	1.2	22	1.3
	24	16	1.9	23	2.0	16	1.7	23	1.9	15	1.8	22	2.0	15	1.7	22	1.9
	28	16	2.5	23	2.7	16	2.3	23	2.6	15	2.5	22	2.7	15	2.3	22	2.6
	32	16	3.3	23	3.6	16	3.1	23	3.4	15	3.3	22	3.5	15	3.0	22	3.4
	36	16	4.2	22	4.5	16	3.9	23	4.3	15	4.1	22	4.5	15	3.8	22	4.3
	40	13	5.1	20	5.4	16	4.8	23	5.4	13	5.1	20	5.4	15	4.7	22	5.3
3 - 5 - 2 S	20	14	1.3	20	1.4	14	1.1	20	1.3	12	1.2	19	1.3	12	1.1	19	1.3
	24	14	1.8	20	2.0	14	1.6	20	1.9	12	1.8	19	1.9	12	1.6	19	1.8
	28	14	2.5	20	2.7	14	2.2	20	2.5	12	2.4	19	2.6	12	2.1	19	2.5
	32	14	3.2	20	3.5	14	2.9	20	3.3	12	3.1	19	3.4	12	2.8	19	3.2
	36	14	4.1	20	4.4	14	3.7	20	4.2	12	4.0	19	4.3	12	3.5	19	4.1
	40	12	5.0	18	5.3	14	4.6	20	5.2	12	4.9	18	5.3	12	4.4	19	5.0
3 - 5 - 3 S	20	12	1.2	18	1.3	12	1.1	18	1.2	-	-	-	-	-	-	-	-
	24	12	1.8	18	1.9	12	1.6	18	1.8	-	-	-	-	-	-	-	-
	28	12	2.4	18	2.6	12	2.1	18	2.4	-	-	-	-	-	-	-	-
	32	12	3.1	18	3.4	12	2.8	18	3.2	-	-	-	-	-	-	-	-
	36	12	4.0	18	4.3	12	3.5	18	4.0	-	-	-	-	-	-	-	-
	40	11	4.9	16	5.2	12	4.4	18	5.0	-	-	-	-	-	-	-	-
4 - 5 - 0	20	7	1.5	10	1.6	7	1.3	10	1.4	7	1.5	10	1.6	7	1.3	10	1.4
	24	7	2.2	10	2.4	7	1.8	10	2.1	7	2.2	10	2.4	7	1.8	10	2.1
	28	7	2.9	10	3.2	7	2.4	10	2.8	7	2.9	10	3.2	7	2.4	10	2.8
	32	7	3.8	10	4.2	7	3.1	10	3.7	7	3.8	10	4.2	7	3.1	10	3.7
	36	7	4.9	10	5.3	7	4.0	10	4.7	7	4.9	10	5.3	7	4.0	10	4.7
	40	4	5.8	6	6.3	7	4.9	10	5.8	4	5.8	6	6.3	7	4.9	10	5.8
4 - 5 - 1	20	5	1.4	8	1.6	5	1.3	8	1.3	-	-	6	1.5	-	-	6	1.3
	24	5	2.0	8	2.3	5	1.6	8	1.9	-	-	6	2.2	-	-	6	1.7
	28	5	2.8	8	3.1	5	2.1	8	2.6	-	-	6	2.9	-	-	6	2.4
	32	5	3.6	8	4.0	5	2.8	8	3.4	-	-	6	3.8	-	-	6	3.1
	36	5	4.6	8	5.1	5	3.5	8	4.3	-	-	6	4.8	-	-	6	3.9
	40	5	5.5	5	6.0	5	4.4	8	5.3	-	-	5	5.9	-	-	6	4.9
4 - 5 - 2	20	4	1.3	6	1.5	4	1.3	6	1.3	-	-	-	-	-	-	-	-
	24	4	1.9	6	2.2	4	1.4	6	1.8	-	-	-	-	-	-	-	-
	28	4	2.6	6	3.0	4	1.9	6	2.4	-	-	-	-	-	-	-	-
	32	4	3.4	6	3.9	4	2.5	6	3.2	-	-	-	-	-	-	-	-
	36	4	4.3	6	4.9	4	3.2	6	4.0	-	-	-	-	-	-	-	-
	40	5	5.3	5	5.9	4	3.9	6	5.0	-	-	-	-	-	-	-	-
4 - 5 - 3	20	-	-	-	-	-	-	-	-	-	-	-	-	-	-	-	-
	24	-	-	-	-	-	-	-	-	-	-	-	-	-	-	-	-
	28	-	-	-	-	-	-	-	-	-	-	-	-	-	-	-	-
	32	-	-	-	-	-	-	-	-	-	-	-	-	-	-	-	-
	36	-	-	-	-	-	-	-	-	-	-	-	-	-	-	-	-
	40	-	-	-	-	-	-	-	-	-	-	-	-	-	-	-	-

Fully Boarded, Debris Netted. Summary

Designation	S	Lightly loaded inside boards								Fully loaded inside boards							
		Country				Town				Country				Town			
		Ties at alternate lifts		Ties at every lift		Ties at alternate lifts		Ties at every lift		Ties at alternate lifts		Ties at every lift		Ties at alternate lifts		Ties at every lift	
		Safe Height m	Tie force kN	Safe Height m	Tie force kN	Safe Height m	Tie force kN	Safe Height m	Tie force kN	Safe Height m	Tie force kN	Safe Height m	Tie force kN	Safe Height m	Tie force kN	Safe Height m	Tie force kN
1 - 3 - 0	20	16	3.8	18	3.8	16	3.8	18	3.8	16	3.8	18	3.8	16	3.8	18	3.8
	24	14	3.9	15	3.9	16	3.8	18	3.8	14	3.9	15	3.9	16	3.8	18	3.8
	28	7	5.1	7	4.9	10	5.1	10	4.8	7	5.1	7	4.9	10	5.1	10	4.8
	32	12	6.2	7	5.6	7	6.0	7	5.2	12	6.2	7	5.6	7	6.0	7	5.2
	36	6	6.9	-	-	6	6.3	6	5.7	6	6.9	-	-	6	6.3	6	5.7
	40	-	-	-	-	7	7.0	6	6.5	-	-	-	-	7	7.0	6	6.5
3 - 5 - 0	20	5	3.8	7	3.8	5	3.8	7	3.8	5	3.8	7	3.8	5	3.8	7	3.8
	24	5	3.8	7	3.8	5	3.8	7	3.8	5	3.8	7	3.8	5	3.8	7	3.8
	28	4	4.5	5	4.6	5	3.8	7	4.0	4	4.5	5	4.6	5	3.8	7	4.0
	32	8	5.7	4	5.0	5	5.0	6	4.7	8	5.7	4	5.0	5	5.0	6	4.7
	36	-	-	-	-	8	6.0	6	5.3	-	-	-	-	8	6.0	6	5.3
	40	-	-	-	-	6	6.5	5	5.7	-	-	-	-	6	6.5	5	5.7
3 - 5 - 1	20	4	3.8	5	3.8	4	3.8	5	3.8	6	3.8	4	3.8	6	3.8	4	3.8
	24	4	3.8	5	3.8	4	3.8	5	3.8	6	3.8	4	3.8	6	3.8	4	3.8
	28	7	4.3	4	4.4	4	3.8	5	3.8	6	4.1	7	4.3	6	3.8	4	3.8
	32	6	5.4	-	-	4	4.6	5	4.8	6	5.4	-	-	6	4.3	4	4.6
	36	-	-	-	-	7	5.8	6	5.3	-	-	-	-	6	5.4	6	5.3
	40	-	-	-	-	7	6.8	-	-	-	-	-	-	6	6.7	-	-
3 - 5 - 2	20	6	3.8	4	3.8	6	3.8	4	3.8	4	3.8	5	3.8	4	3.8	5	3.8
	24	6	3.8	4	3.8	6	3.8	4	3.8	4	3.8	5	3.8	4	3.8	5	3.8
	28	6	4.1	7	4.3	6	3.8	4	3.8	4	3.8	5	4.0	4	3.8	5	3.8
	32	6	5.3	-	-	6	4.2	4	4.5	4	4.9	-	-	4	3.8	5	3.9
	36	-	-	-	-	6	5.3	6	5.3	-	-	-	-	4	4.4	5	4.9
	40	-	-	-	-	6	6.4	-	-	-	-	-	-	4	5.5	-	-
3 - 5 - 3	20	-	-	-	-	-	-	-	-	-	-	-	-	-	-	-	-
	24	-	-	-	-	-	-	-	-	-	-	-	-	-	-	-	-
	28	-	-	-	-	-	-	-	-	-	-	-	-	-	-	-	-
	32	-	-	-	-	-	-	-	-	-	-	-	-	-	-	-	-
	36	-	-	-	-	-	-	-	-	-	-	-	-	-	-	-	-
	40	-	-	-	-	-	-	-	-	-	-	-	-	-	-	-	-
3 - 5 - 0 S	20	14	2.9	21	2.9	14	2.9	21	2.9	14	2.9	21	2.9	14	2.9	21	2.9
	24	14	2.9	21	3.0	14	2.9	21	2.9	14	2.9	21	3.0	14	2.9	21	2.9
	28	13	3.8	19	4.1	14	3.5	21	3.9	13	3.8	19	4.1	14	3.5	21	3.9
	32	7	4.8	10	5.1	11	4.5	14	5.1	7	4.8	10	5.1	11	4.5	14	5.1
	36	8	5.4	6	5.9	7	5.1	9	5.7	8	5.4	6	5.9	7	5.1	8	5.7
	40	-	-	7	6.5	6	5.6	7	6.1	-	-	7	6.5	6	5.6	6	6.1
3 - 5 - 1 S	20	11	2.9	18	2.9	11	2.9	18	2.9	10	2.9	17	2.9	10	2.9	17	2.9
	24	11	2.9	18	2.9	11	2.9	18	2.9	10	2.9	17	2.9	10	2.9	17	2.9
	28	11	3.6	16	3.9	11	3.3	18	3.7	10	3.6	16	3.9	10	3.2	17	3.7
	32	7	4.6	10	5.0	10	4.2	13	4.9	7	4.6	9	5.0	10	4.1	13	4.8
	36	7	5.3	5	5.8	7	4.9	8	5.7	7	5.3	5	5.7	7	4.9	8	5.5
	40	-	-	7	6.5	6	5.6	7	5.8	-	-	7	6.5	6	5.2	7	5.8
3 - 5 - 2 S	20	10	2.9	16	2.9	10	2.9	16	2.9	8	2.9	14	2.9	8	2.9	14	2.9
	24	10	2.9	16	2.9	10	2.9	16	2.9	8	2.9	14	2.9	8	2.9	14	2.9
	28	10	3.5	15	3.9	10	3.1	16	3.6	8	3.4	14	3.8	8	2.9	14	3.5
	32	6	4.5	9	4.9	10	4.0	12	4.7	6	4.5	8	4.9	8	3.8	12	4.5
	36	6	5.2	4	5.8	7	4.9	8	5.5	6	5.1	4	5.8	7	4.8	8	5.5
	40	-	-	6	6.3	6	5.2	7	5.8	-	-	6	6.3	6	5.2	6	5.8
3 - 5 - 3 S	20	8	2.9	14	2.9	8	2.9	14	2.9	-	-	-	-	-	-	-	-
	24	8	2.9	14	2.9	8	2.9	14	2.9	-	-	-	-	-	-	-	-
	28	8	3.4	13	3.8	8	2.9	14	3.4	-	-	-	-	-	-	-	-
	32	6	4.4	9	4.8	8	3.8	12	4.5	-	-	-	-	-	-	-	-
	36	6	5.0	10	5.7	7	4.9	8	5.4	-	-	-	-	-	-	-	-
	40	-	-	6	6.2	6	5.2	6	5.8	-	-	-	-	-	-	-	-
4 - 5 - 0	20	5	3.8	6	3.8	5	3.8	6	3.8	5	3.8	6	3.8	5	3.8	6	3.8
	24	5	3.8	6	3.8	5	3.8	6	3.8	5	3.8	6	3.8	5	3.8	6	3.8
	28	5	3.8	6	4.1	5	3.8	6	3.8	5	3.8	6	4.1	5	3.8	6	3.8
	32	5	5.0	-	-	5	3.8	6	4.1	5	5.0	-	-	5	3.8	6	4.1
	36	-	-	-	-	5	4.6	6	5.2	-	-	-	-	5	4.6	6	5.2
	40	-	-	-	-	5	5.7	-	-	-	-	-	-	5	5.7	-	-
4 - 5 - 1	20	-	-	4	3.8	-	-	4	3.8	-	-	-	-	-	-	-	-
	24	-	-	4	3.8	-	-	4	3.8	-	-	-	-	-	-	-	-
	28	-	-	4	3.8	-	-	4	3.8	-	-	-	-	-	-	-	-
	32	-	-	-	-	-	-	4	3.8	-	-	-	-	-	-	-	-
	36	-	-	-	-	-	-	4	4.5	-	-	-	-	-	-	-	-
	40	-	-	-	-	-	-	-	-	-	-	-	-	-	-	-	-
4 - 5 - 2	20	-	-	-	-	-	-	-	-	-	-	-	-	-	-	-	-
	24	-	-	-	-	-	-	-	-	-	-	-	-	-	-	-	-
	28	-	-	-	-	-	-	-	-	-	-	-	-	-	-	-	-
	32	-	-	-	-	-	-	-	-	-	-	-	-	-	-	-	-
	36	-	-	-	-	-	-	-	-	-	-	-	-	-	-	-	-
	40	-	-	-	-	-	-	-	-	-	-	-	-	-	-	-	-
4 - 5 - 3	20	-	-	-	-	-	-	-	-	-	-	-	-	-	-	-	-
	24	-	-	-	-	-	-	-	-	-	-	-	-	-	-	-	-
	28	-	-	-	-	-	-	-	-	-	-	-	-	-	-	-	-
	32	-	-	-	-	-	-	-	-	-	-	-	-	-	-	-	-
	36	-	-	-	-	-	-	-	-	-	-	-	-	-	-	-	-
	40	-	-	-	-	-	-	-	-	-	-	-	-	-	-	-	-

Fully Boarded, Sheeted. Summary

Designation	S	Lightly loaded inside boards								Fully loaded inside boards							
		Country				Town				Country				Town			
		Ties at alternate lifts		Ties at every lift		Ties at alternate lifts		Ties at every lift		Ties at alternate lifts		Ties at every lift		Ties at alternate lifts		Ties at every lift	
		Safe Height m	Tie force kN	Safe Height m	Tie force kN	Safe Height m	Tie force kN	Safe Height m	Tie force kN	Safe Height m	Tie force kN	Safe Height m	Tie force kN	Safe Height m	Tie force kN	Safe Height m	Tie force kN
1 - 3 - 0	20	12	4.9	10	4.7	12	4.4	10	4.0	12	4.9	10	1.6	12	4.4	10	4.0
	24	9	6.6	-	-	11	6.0	8	5.3	8	6.4	-	-	11	6.0	8	5.3
	28	-	-	-	-	7	6.8	6	6.4	-	-	-	-	7	6.8	6	6.4
	32	-	-	-	-	6	8.4	-	-	-	-	-	-	6	8.4	-	-
	36	-	-	-	-	-	-	-	-	-	-	-	-	-	-	-	-
	40	-	-	-	-	-	-	-	-	-	-	-	-	-	-	-	-
3 - 5 - 0	20	-	-	-	-	-	-	-	-	-	-	-	-	-	-	-	-
	24	-	-	-	-	-	-	-	-	-	-	-	-	-	-	-	-
	28	-	-	-	-	-	-	-	-	-	-	-	-	-	-	-	-
	32	-	-	-	-	-	-	-	-	-	-	-	-	-	-	-	-
	36	-	-	-	-	-	-	-	-	-	-	-	-	-	-	-	-
	40	-	-	-	-	-	-	-	-	-	-	-	-	-	-	-	-
3 - 5 - 1	20	-	-	-	-	-	-	-	-	-	-	-	-	-	-	-	-
	24	-	-	-	-	-	-	-	-	-	-	-	-	-	-	-	-
	28	-	-	-	-	-	-	-	-	-	-	-	-	-	-	-	-
	32	-	-	-	-	-	-	-	-	-	-	-	-	-	-	-	-
	36	-	-	-	-	-	-	-	-	-	-	-	-	-	-	-	-
	40	-	-	-	-	-	-	-	-	-	-	-	-	-	-	-	-
3 - 5 - 2	20	-	-	-	-	-	-	-	-	-	-	-	-	-	-	-	-
	24	-	-	-	-	-	-	-	-	-	-	-	-	-	-	-	-
	28	-	-	-	-	-	-	-	-	-	-	-	-	-	-	-	-
	32	-	-	-	-	-	-	-	-	-	-	-	-	-	-	-	-
	36	-	-	-	-	-	-	-	-	-	-	-	-	-	-	-	-
	40	-	-	-	-	-	-	-	-	-	-	-	-	-	-	-	-
3 - 5 - 3	20	-	-	-	-	-	-	-	-	-	-	-	-	-	-	-	-
	24	-	-	-	-	-	-	-	-	-	-	-	-	-	-	-	-
	28	-	-	-	-	-	-	-	-	-	-	-	-	-	-	-	-
	32	-	-	-	-	-	-	-	-	-	-	-	-	-	-	-	-
	36	-	-	-	-	-	-	-	-	-	-	-	-	-	-	-	-
	40	-	-	-	-	-	-	-	-	-	-	-	-	-	-	-	-
3 - 5 - 0 S	20	5	3.4	10	3.8	5	2.9	10	3.5	5	3.4	10	3.8	5	2.9	10	3.5
	24	5	4.9	7	5.5	5	4.1	10	5.1	5	4.9	7	5.5	5	4.1	10	5.1
	28	-	-	7	6.4	5	5.4	7	5.9	-	-	7	6.4	5	5.4	7	5.9
	32	-	-	-	-	6	6.3	6	6.7	-	-	-	-	6	6.3	6	6.3
	36	-	-	-	-	-	-	6	7.9	-	-	-	-	-	-	6	7.9
	40	-	-	-	-	-	-	-	-	-	-	-	-	-	-	-	-
3 - 5 - 1 S	20	7	3.2	8	3.7	7	2.9	8	3.3	6	3.1	7	3.6	6	2.9	7	3.2
	24	7	4.7	7	5.3	7	3.7	8	4.7	6	4.5	7	5.2	6	3.5	7	4.6
	28	-	-	6	6.2	7	5.1	7	5.9	-	-	7	6.4	6	4.7	6	5.9
	32	-	-	-	-	6	6.3	5	6.7	-	-	-	-	6	6.2	5	6.3
	36	-	-	-	-	-	-	6	7.9	-	-	-	-	-	-	6	8.0
	40	-	-	-	-	-	-	-	-	-	-	-	-	-	-	-	-
3 - 5 - 2 S	20	6	3.1	7	3.6	6	2.9	7	3.1	4	2.9	5	3.5	4	2.9	5	2.9
	24	6	4.5	7	5.2	6	3.4	7	4.5	4	4.1	5	5.0	4	2.9	5	4.2
	28	-	-	7	6.3	6	4.7	7	5.9	-	-	7	6.3	4	3.9	5	5.7
	32	-	-	-	-	6	6.1	4	6.7	-	-	-	-	4	5.1	6	6.3
	36	-	-	-	-	-	-	6	7.7	-	-	-	-	-	-	5	7.5
	40	-	-	-	-	-	-	-	-	-	-	-	-	-	-	-	-
3 - 5 - 3 S	20	5	3.0	6	3.5	5	2.9	6	3.0	-	-	-	-	-	-	-	-
	24	5	4.3	6	5.0	5	3.1	6	4.3	-	-	-	-	-	-	-	-
	28	-	-	6	6.2	5	4.2	6	5.8	-	-	-	-	-	-	-	-
	32	-	-	-	-	5	5.5	7	6.7	-	-	-	-	-	-	-	-
	36	-	-	-	-	-	-	5	7.3	-	-	-	-	-	-	-	-
	40	-	-	-	-	-	-	-	-	-	-	-	-	-	-	-	-
4 - 5 - 0	20	-	-	-	-	-	-	-	-	-	-	-	-	-	-	-	-
	24	-	-	-	-	-	-	-	-	-	-	-	-	-	-	-	-
	28	-	-	-	-	-	-	-	-	-	-	-	-	-	-	-	-
	32	-	-	-	-	-	-	-	-	-	-	-	-	-	-	-	-
	36	-	-	-	-	-	-	-	-	-	-	-	-	-	-	-	-
	40	-	-	-	-	-	-	-	-	-	-	-	-	-	-	-	-
4 - 5 - 1	20	-	-	-	-	-	-	-	-	-	-	-	-	-	-	-	-
	24	-	-	-	-	-	-	-	-	-	-	-	-	-	-	-	-
	28	-	-	-	-	-	-	-	-	-	-	-	-	-	-	-	-
	32	-	-	-	-	-	-	-	-	-	-	-	-	-	-	-	-
	36	-	-	-	-	-	-	-	-	-	-	-	-	-	-	-	-
	40	-	-	-	-	-	-	-	-	-	-	-	-	-	-	-	-
4 - 5 - 2	20	-	-	-	-	-	-	-	-	-	-	-	-	-	-	-	-
	24	-	-	-	-	-	-	-	-	-	-	-	-	-	-	-	-
	28	-	-	-	-	-	-	-	-	-	-	-	-	-	-	-	-
	32	-	-	-	-	-	-	-	-	-	-	-	-	-	-	-	-
	36	-	-	-	-	-	-	-	-	-	-	-	-	-	-	-	-
	40	-	-	-	-	-	-	-	-	-	-	-	-	-	-	-	-
4 - 5 - 3	20	-	-	-	-	-	-	-	-	-	-	-	-	-	-	-	-
	24	-	-	-	-	-	-	-	-	-	-	-	-	-	-	-	-
	28	-	-	-	-	-	-	-	-	-	-	-	-	-	-	-	-
	32	-	-	-	-	-	-	-	-	-	-	-	-	-	-	-	-
	36	-	-	-	-	-	-	-	-	-	-	-	-	-	-	-	-
	40	-	-	-	-	-	-	-	-	-	-	-	-	-	-	-	-

Appendix

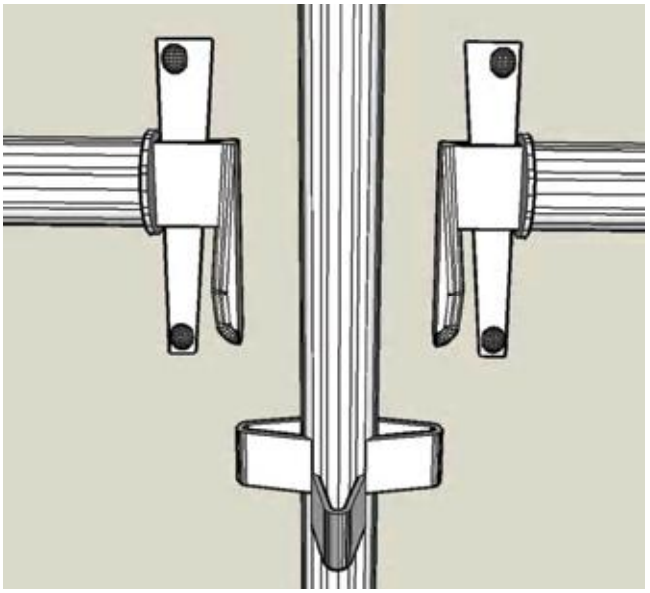

Aluminium Kwikstair

User Guide

Diagonal Facade Bracing of Climastage incorporating Stairway Bays

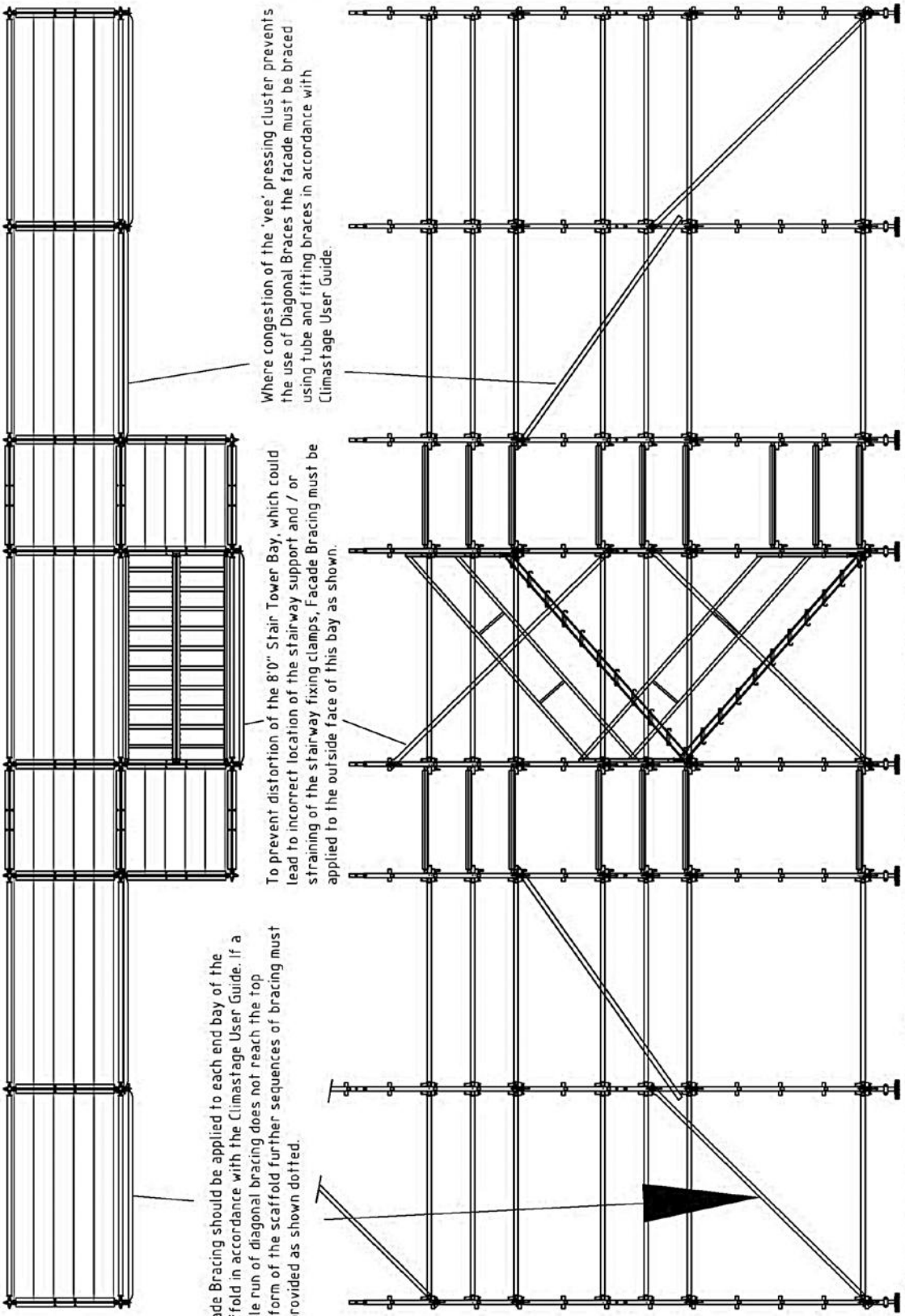

Note. To ensure the correct installation of Stairway units it is essential that the foundations of the scaffold are adequate to prevent disproportionate settlement and that all bays containing stairway stringers are level, plumb and square in plan otherwise the seating of the stairway units on the transoms may be inadequate. After initial setting out check that the first and subsequent stairway units fully engage onto the transoms and the securing clamps are located around the underside of the transom and the wing nuts tightened hand tight to prevent side slip and uplift.

alsure

TECHNICAL INFORMATION SHEET

Alsure Limited
80 Wrentham Street
Birmingham B5 6QL
Tel. 0121 622 6122
Fax.0121 666 7585

© COPYRIGHT 2006

TIS103/01			Revision B
Prepared	Checked	Issue Date	Approved
ACO	DHS	28/02/2007	ACO

Alsure Aluminium Stairway & Handrail Installation.

The stairway is designed to fit Genuine Climastage Scaffolding (Imperial) 8'0" long x 4'2" wide x 6'6" lift (2438.4mm x 1270mm x 1981.2mm).

Note 1. To ensure the correct installation of Stairway units it is essential that all bays containing stairway stringers are level, plumb and square in plan otherwise the seating of the stairway units on the transoms may be inadequate.
After initial setting out check that the first and subsequent stairway units fully engaged onto the transoms and the securing clamps are located around the underside of the transom and the wing nuts tightened hand tight to prevent side slip and uplift. If necessary use a tape measure to check the diagonal dimension of bays at both sides.

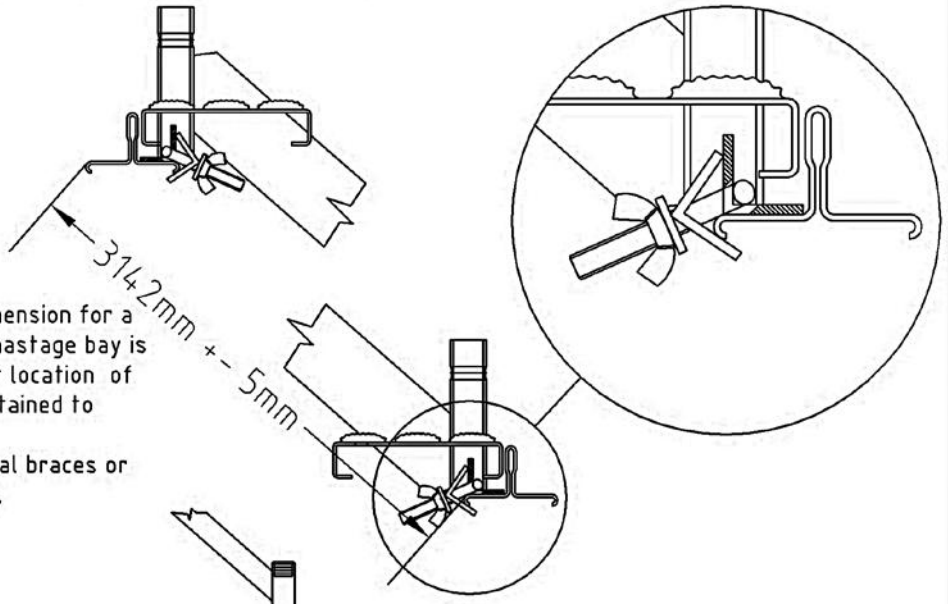

Note 2. The diagonal dimension for a 8'0" wide x 6'6"High Climastage bay is 3142mm. and for correct location of stairways must be maintained to within +- 5 mm
using Climastage diagonal braces or tube and fitting bracing.

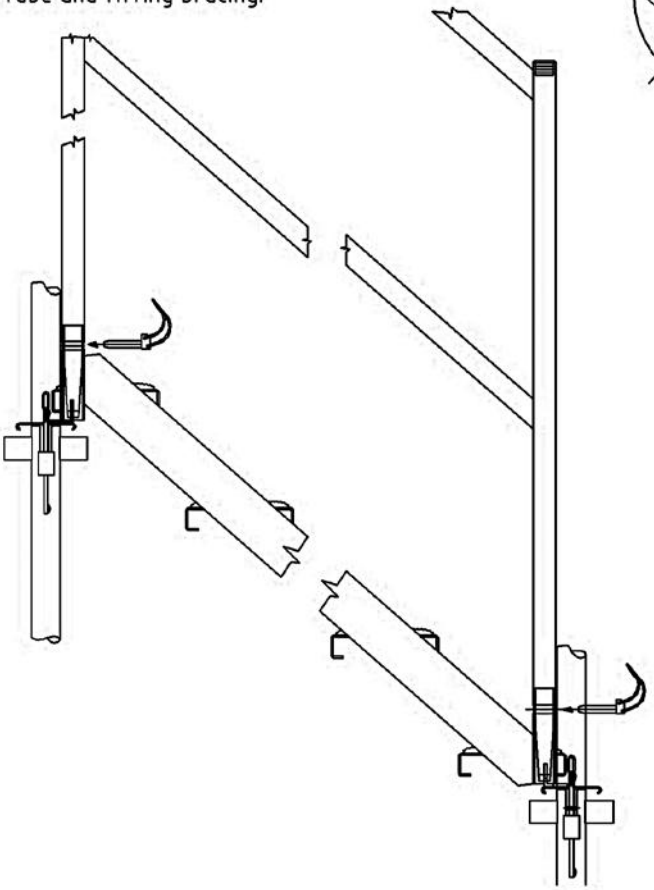

Note 3. To prevent the risk of falls, a pair of Handrails must be installed on each Stairway Stringer and must be locked in position using 12mm dia Climastage connecting pins or m12 x 60 bolts and locknuts.

Note 4. Under no circumstances should this stairway equipment be used on other forms of System Scaffold including 'Copy Climastage' without reference to the Manufacturer, Technical Dept, Alsure Limited.

alsure

TECHNICAL INFORMATION SHEET

Alsure Limited
80 Wrentham Street
Birmingham B5 6QL
Tel. 0121 622 6122
Fax.0121 666 7585

© COPYRIGHT 2006

TIS103/02	Revision B		
Prepared	Checked	Issue Date	Approved
ACO	DHS	28/02/2007	ACO

Alsure Climastair Inspection and Maintenance Schedule.

1. Remove all site dirt and debris using jet wash and detergent.
DO NOT USE CHEMICAL CLEANERS containing Acids or Alkalis as corrosion damage will occur.

2. Inspect side rails (Stiles) for damage such as dents or cuts in the surface or damaged tee slots - Remove from service if damaged.

3. Check that the bolts securing the tread cleats are not loose and that the tee-slots in the stile members are not distorted. When replacing cleats ensure hidden end of bolt locates in the drilled location hole in the stile whilst tightening (use 1 drop of 'Bond Lock' thread lock fluid on bolt threads if re-using captive lock nuts.)

4. Check that all stair treads are undamaged, are secured at each end, the fixing screws are not loose or missing and that treads are secured using 4 screws at the positions shown. Replace screws if required.

5. Note. The lowest cleat is welded in position and is not site repairable.

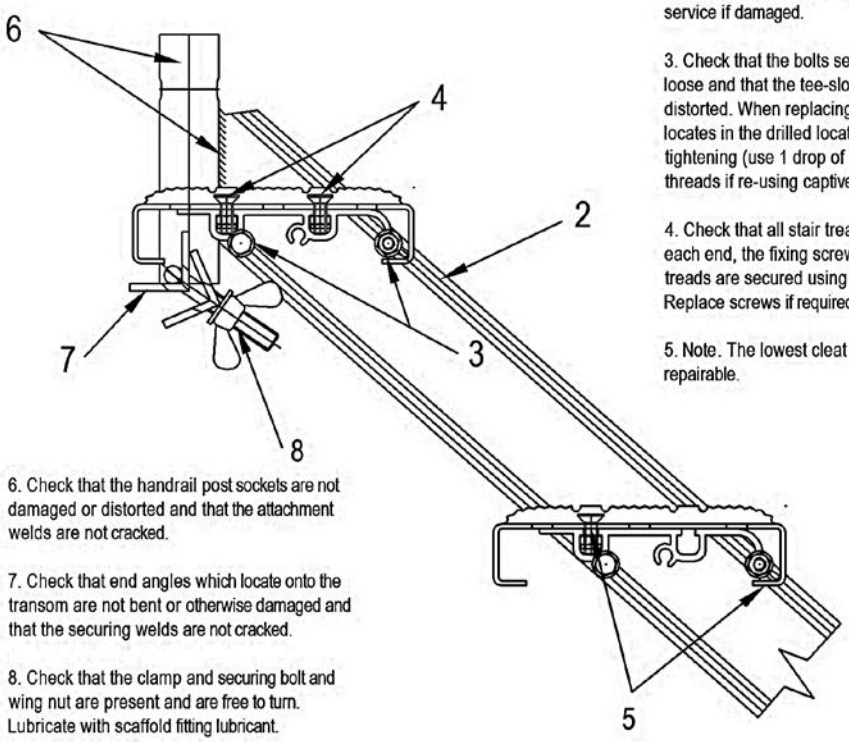

6. Check that the handrail post sockets are not damaged or distorted and that the attachment welds are not cracked.

7. Check that end angles which locate onto the transom are not bent or otherwise damaged and that the securing welds are not cracked.

8. Check that the clamp and securing bolt and wing nut are present and are free to turn. Lubricate with scaffold fitting lubricant.

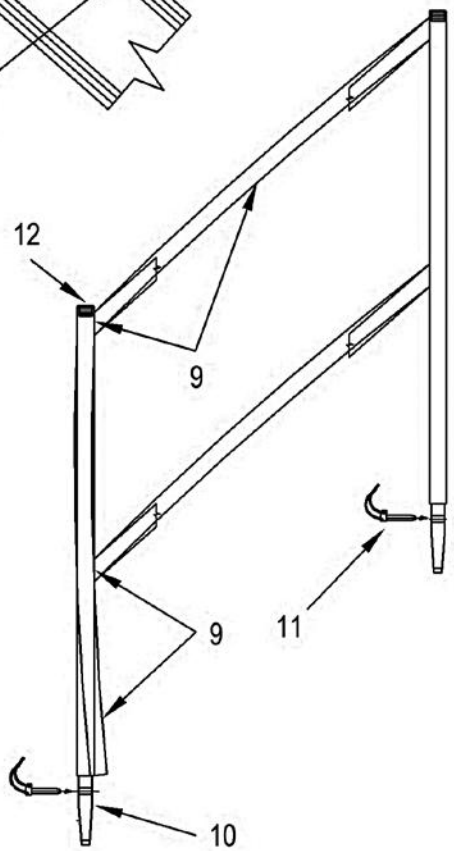

9. Check handrail components for damage or distortion and check that welds are not cracked.

10. Check that Spigot casting is not bent, distorted or cracked or broken.

11. Check that Connecting pin operates correctly and that 2 are present for each handrail unit.

12. Replace any missing or damaged post top protection caps.

Under no circumstances should any attempt be made to straighten aluminium components as they will be weakened and rendered unsafe. Weld repairs must be made in a workshop environment using argon shielded T.I.G. Welding, by skilled Aluminium Welders using compatible filler materials.

A kit of spare parts may be purchased from Alsure Ltd.

alsure

TECHNICAL INFORMATION SHEET

Alsure Limited
80 Wrentham Street
Birmingham B5 6QL
Tel. 0121 622 6122
Fax.0121 666 7585

© COPYRIGHT 2006

TIS103/03			Revision B
Prepared	Checked	Issue Date	Approved
ACO	DHS	28/02/2007	ACO

Alsure Climastair and Handrail unit. Spare Parts List.

1. Stair Tread, 180mm x 38mm x 508mm (Aluminium) 11 per unit.

2. Cleat Extrusion (Aluminium) 40mm long. 22 per unit.

3. M8 x 25 Hexagon bolt. BZP 42 per unit. (Securing Cleat to Stile.)

4. M8 Nylon Insert Lock Nut BZP 88 per unit. (All Nut Positions.)

5. M8 x 20mm button Head Socket Screw BZP or Stainless Steel. 44 per unit.
(Securing Tread to Cleat.)

6. Clamp, 1/2" Whit Clamp Screw, Washer and Wing-nut assy BZP. 2 per unit.

7. 12mm climastage Connecting Pin BZP. 4 per unit.

8. Plastic Post End Plug BLACK P.E. 4 per unit.

9. 'Bond lock' Thread Locking Adhesive.
(Note:- Additional locking fluid 1 drop per screw required when re-using captive nuts in stile.)

Tools.

1. 5mm a/f Hexagon Driver Bit x 100 long.

2. Tee handle Hexagon Key 5mm a/f.

3. 13mm af spanner.

4. M4 Masonry Drill - Removing Concrete from Screw Heads.

5. Welder's Chipping Hammer - Removing Concrete from Treads and Stiles.

Alsure Climastair unit. Work Instruction. Stair packing.

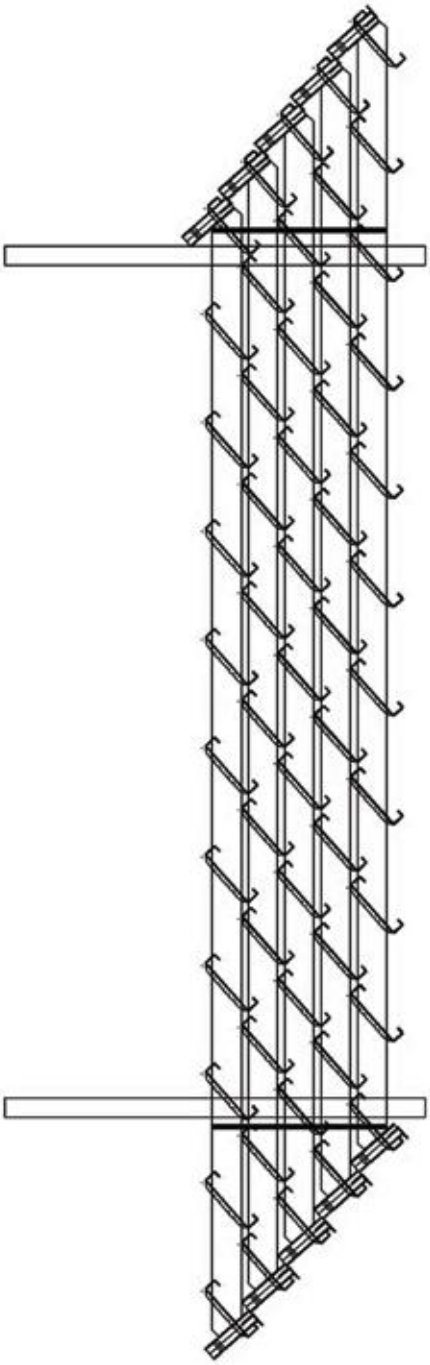

Stair unit Packing instructions.

1. After final inspection of all assembled components stack on edge in 5's and nest top post socket underneath the adjacent post socket with the stair treads nesting together between the stiles.

2. Band using plastic strapping located as near to the ends of the bundle as possible.

3. Use 1.2m long timber bearers to support the bundles placed as near to the ends as possible. Bundles may be stacked into packs of 20 units (2 wide x 2 high) and strapped together using strapping at the ends only. This pack will weigh 1/2 Tonne and may be safely loaded by fork lift truck.

DO NOT STRAP THE CENTRE OF BUNDLE AS PERMANENT DAMAGE TO THE STAIR UNITS MAY RESULT

alsure

TECHNICAL INFORMATION SHEET

Alsure Limited
80 Wrentham Street
Birmingham B5 6QL
Tel. 0121 622 6122
Fax.0121 666 7585

© COPYRIGHT 2006

TIS103/06			Revision B
Prepared	Checked	Issue Date	Approved
ACO	DHS	28/02/2007	ACO

Alsure Climastair Bulk Packing for Road Transport.

Stair unit Bulk Packing instructions for Road Transport.

For bulk transport bundles of 5 stairs may be strapped together into packs of 20 i.e. 2 bundles wide x 2 bundles high and strapped together using timber bearers as necessary. These bundles weigh approx. 1/2 tonne and may be safely lifted by fork truck.

These bundles then may be safely loaded on a transport vehicle as 2 bundles wide by 2 bundles high and secured by roping or by ratchet straps. Note. Ratchet straps can exert a tension of more than 1 tonne therefore, to prevent damage, timber bearers and straps / ropes must be positioned near to the ends of the bundles and the straps tightened sufficiently to restrain the load without damaging the stair units.

Dimensions are approximate. Stairs packed as shown = 80 units. Weight = 2.2 tonne approx.

alsure

TECHNICAL INFORMATION SHEET

Alsure Limited
80 Wrentham Street
Birmingham B5 6QL
Tel. 0121 622 6122
Fax.0121 666 7585

© COPYRIGHT 2006

TIS103/07

Revision B

Prepared	Checked	Issue Date	Approved
ACO	DHS	28/02/2007	ACO

Alsure Climastair Handrail unit. Packing instructions.

Note: To prevent damage to components and to prevent the risk of injury whilst mechanically handling quantities of materiel, the following procedures should be adopted.

1. Pack upside-down aligned neatly in bundles of 10 and strap together around intermediate handrail using plastic strapping. To aid alignment, the bundle may be suspended from a pair of fork lift blades at a convenient height as shown.

2. For stability during transport place second bundle alongside and strap the two bundles together around the two handrails as shown. 3 bundles of 20 will fit across the width of a H.G.V. Trailer. Odd components should be strapped against a full bundle.

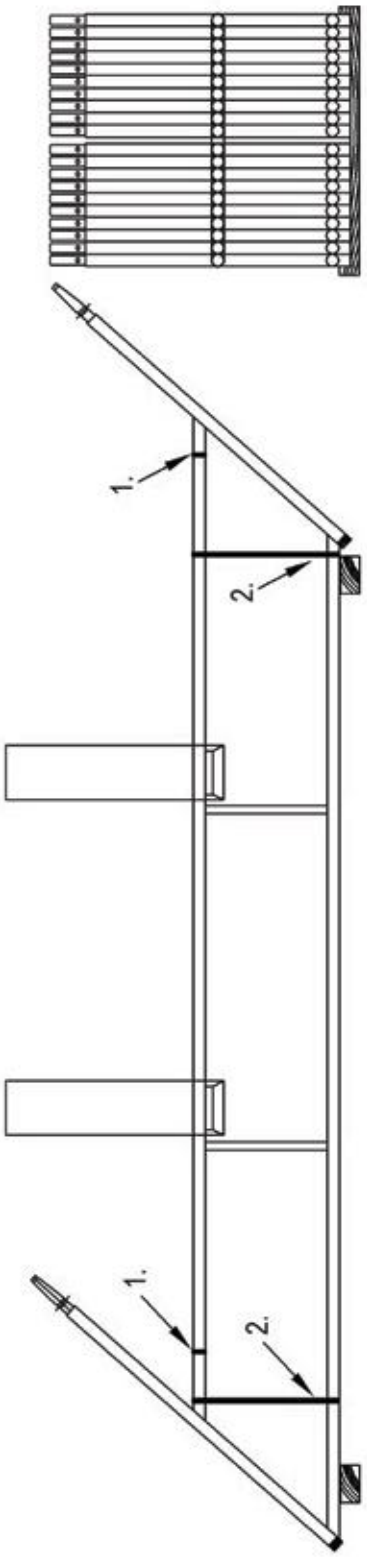

alsure

TECHNICAL INFORMATION SHEET

Alsure Limited
80 Wrentham Street
Birmingham B5 6QL
Tel. 0121 622 6122
Fax.0121 666 7585

© COPYRIGHT 2006

TIS103/08			Revision B
Prepared	Checked	Issue Date	Approved
ACO	DHS	28/02/2007	ACO

Alsure Climastair Handrails Bulk Packing for Road Transport.

Note:
To prevent damage to components and to prevent the risk of injury whilst mechanically handling larger quantities of materiel, the following procedures should be adopted.

1. Pack upside-down aligned neatly in bundles of 10 and strap together around intermediate handrail as shown in TIS 103/08.

2. Rotate bundle on to one side and stack and band bundles neatly in pairs back to back. These bundles may then be stacked on top of one another using timber spacers positioned near to the ends of the bundles, and then strapped into multiple bundles before lifting. Long forks or fork extensions may be required to reach sufficiently far across the truck bed.

3. To prevent damage, timber bearers banding and load straps / ropes must be as near to ends of the bundles as possible.

4. Single stacks of handrails should not be mechanically lifted whilst on their sides as the centre of gravity of the bundle may cause the bundle to be unstable, lift single stacks upside down under the intermediate handrail.

5. It may be necessary to secure bundles to vehicle as loading progresses to prevent instability whilst loading and subsequently unloading.

6. To comply with Working at Height Regulations in may be necessary to strap the timber bearers to the bundles at ground level prior to lifting bundles to heights above 2.0 metres.

Caution! Ratchet straps can exert tensions exceeding 1 tonne each therefore over-tightening or poor positioning of straps may cause damage to components and must be avoided.

TECHNICAL INFORMATION SHEET

Alsure Limited
80 Wrentham Street
Birmingham B5 6QL
Tel. 0121 622 6122
Fax.0121 666 7585

© COPYRIGHT 2006

TIS103/09			Revision A
Prepared	Checked	Issue Date	Approved
ACO	DHS	28/02/2007	ACO

Notes

SCOTLAND & NORTH REGION

Dundee
6 George Buckman Drive,
Dundee, DD2 3SP
Tel: 01382 227 552
dundee.hire@actavo.com

Edinburgh
Unit 2, West Harbour Road,
Granton, Edinburgh, EH5 1PP
Tel: 0131 552 7534
edinburgh.hire@actavo.com

Gateshead
Nest Road, Felling Industrial Estate,
Gateshead, Tyne & Wear, NE10 0LU
Tel: 0191 469 8125
gateshead.hire@actavo.com

Glasgow
37 Colquhoun Avenue,
Hillington Industrial Estate,
Glasgow, G52 4PL
Tel: 0141 810 8350
glasgow.hire@actavo.com

Manchester
Elm Grove, Sale, Cheshire,
M33 7JY
Tel: 0161 969 3925
manchester.hire@actavo.com

Teesside
Brenda Road, Hartlepool, TS25 2BT
Tel: 01429 261 444
teesside.hire@actavo.com

CENTRAL REGION

Brigg
Island Carr Industrial Estate,
Island Carr Road, Brigg,
North Lincolnshire, DN20 8PD
Tel: 01652 601 390
brigg.hire@actavo.com

King's Lynn
23 Maple Road,
Saddlebow Industrial Estate,
King's Lynn, Norfolk, PE34 3AH
Tel: 01553 771 465
kingslynn.hire@actavo.com

Leeds
Unit 7, Hawthorne Court,
Howley Park Road, Morley,
Leeds, LS27 0BN
Tel: 0113 387 0630
leeds.hire@actavo.com

Norwich
Arminghall Close, Woodcock Road,
Norwich, NR3 3UE
Tel: 01603 309 010
norwich.hire@actavo.com

Nottingham
Manor House Road, Long Eaton
Nottingham, NG10 1LR
Tel: 0115 946 7660
nottingham.hire@actavo.com

Peterborough
Unit 5, Fengate Trade Park,
Second Drove, Peterborough,
Cambridgeshire, PE1 5XA
Tel: 01733 890 009
peterborough.hire@actavo.com

South Yorkshire
Unit 14, Meadow Bank Works,
Meadow Bank Road, Rotherham,
South Yorkshire, S61 2NF
Tel: 01709 554 149
southyorkshire.hire@actavo.com

SOUTH EAST REGION

Chelmsford
Unit 14, Temple Wood Industrial
Estate, Stock Road, Chelmsford,
CM2 8LA
Tel: 01277 841 670
chelmsford.hire@actavo.com

East London - Bow
Unit 3, Primrose Works,
10 Stour Road, Bow, London,
E3 2NT
Tel: 020 8533 7333
bow.hire@actavo.com

South London - Thornton Heath
Station Yard, 56 Brigstock Road,
Thornton Heath, Surrey, CR7 8RX
Tel: 020 8689 6044
croydon.hire@actavo.com

Luton
227-231 Selbourne Road,
Luton, Bedfordshire, LU4 8NR
Tel: 01582 491 000
luton.hire@actavo.com

Maidstone
Unit 4, St Michaels Close,
Aylesford, ME20 7XE
Tel: 01622 794 450
kent.hire@actavo.com

West London - Uxbridge
Wallingford Road, Uxbridge,
Middlesex, UB8 2XS
Tel: 01895 527 666
uxbridge.hire@actavo.com

SOUTH WEST REGION

Birmingham
319 Shady Lane, Great Barr
Birmingham, B44 9EA
Tel: 0121 366 7840
birmingham.hire@actavo.com

Bournemouth
Unit 158, Eastern Business Park,
Bournemouth International Airport,
Christchurch, Dorset, BH23 6NE
Tel: 01202 591 255
bournemouth.hire@actavo.com

Bristol
Silverthorne Lane, St. Philips,
Bristol, Avon, BS2 0QD
Tel: 0117 972 3353
bristol.hire@actavo.com

Cardiff
Longships Road, Cardiff Docks
CF10 4RP
Tel: 029 2079 1188
cardiff.hire@actavo.com

Chichester
Units A & B, Tokar Industrial Estate,
Yapton Lane, Walberton,
West Sussex, BN18 0AS
Tel: 01243 558 290
chichester.hire@actavo.com

Exeter
Cofton Road, Marsh Barton,
Exeter, Devon, EX2 8QW
Tel: 01392 273 595
exeter.hire@actavo.com

Truro
Perranwell Station,
Perranwell, Near Truro,
Cornwall, TR3 7LG
Tel: 01872 870 078
truro.hire@actavo.com

SHORING

Birmingham
319 Shady Lane, Great Barr
Birmingham, B44 9EA
Tel: 0121 366 7840
birmingham.shoring@actavo.com

Northampton
21-22 Enterprise Road, Raunds
Northampton, NN9 6JE
Tel: 01933 462 190
raunds.shoring@actavo.com

West London - Uxbridge
Wallingford Road, Uxbridge,
Middlesex, UB8 2XS
Tel: 01895 527 675
uxbridge.shoring@actavo.com

IRELAND

Cork
Silver Bullet Industrial Estate,
Glanmire, Co. Cork, Ireland
Tel: +353 21 486 6400
cork.hire@actavo.com

Dublin
Killeen Road, Dublin,
Co. Dublin, Ireland
Tel: +353 1 601 1500
dublin.hire@actavo.com

Galway
Airglooney Industrial Estate,
Tuam, Co. Galway, Ireland
Tel: +353 93 60470
galway.hire@actavo.com

Santry
Turnapin Lane, Old Swords Road,
Cloghran, Co. Dublin, Ireland
Tel: 01 901 8690
dublin.hire@actavo.com

Actavo

Hire & Sales Solutions
Unit C, Cedar Court Office Park, Denby Dale Road, Calder Grove,
Wakefield, West Yorkshire, WF4 3QZ
Tel: +44 (0)1924 416000 | Fax: +44 (0)1924 366250
Email: quoteme@actavo.com